YAMAHA

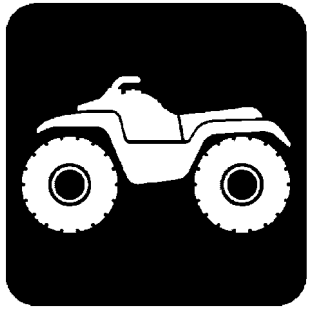

PARTS CATALOGUE

YXE70WPHH (2MBG) U.S.A.

1S2MB-110EA

( )

YAMAHA GENUINE Parts & Accessories

2017/12/25

NEWS NO.	DATE	COMMENT
PE0-MC-160082	Aug.,8,2016	MOD:YXE70(2MB/B35/B52/BN5/BW1/BW6) EMBLEM LABEL 1 LIST/ILLUST. REVISION
PE0-MC-170062	Jun.,1,2017	MOD:2MB/B35/B52/BN4/BN5 SIDE COVER LIST/ILLUST. REVISION
PE0-MC-170128	Nov.,3,2017	COR:2MB/B35/BN4/BN5/BW1/BW6 FIG.28,29 LIST CORRECTION

YXE70WPHH
PARTS CATALOGUE
©2016 by Yamaha Motor Co., Ltd.
1st edition, April 2016
All rights reserved.
Any reprinting or unauthorized use
without the written permission of
Yamaha Motor Co., Ltd.
is expressly prohibited.
Printed in Japan.

FOREWORD

This Parts Catalogue is related to the parts for the model(s) on the cover page. When you are ordering replacement parts, please refer to this Parts Catalogue and quote both part numbers and part names correctly.

1. Modifications or additions which have been made after the issue of the Parts Catalogue will be announced in the Parts News.
   It is advisable that you make the necessary corrections to the Parts Catalogue according to the Parts News.

2. Abbreviations
   The following abbreviations are used in this Parts Catalogue.

   "UR" Use specified parts number.

   "UN" Use as many as needed.

   "AP" Alternate Parts

   "LM" Locally Made (Parts need to be ordered locally)

   "F#" Frame No. (Applicable machine No.)

   "O/S" Over Size

3. The number of components for assembly
   - Parts, which are to be supplied in an assembly, are listed with a dot (.) in front of the part name as shown below.
   - The numeral appearing to the right of each component part indicates the quantity of parts for each assembly unit.

PART NO.	DESCRIPTION	Q'TY	REMARKS
2F5–83310–60	FRONT FLASHER LIGHT ASSY	2	
115–83311–60	.BULB (6V–18W)	1	

4. Applicable colours of graphics are represented in the "REMARKS" as shown below.

PART NO.	DESCRIPTION	Q'TY	REMARKS
2N4–24110–00–X5	FUEL TANK COMP.	2	MXR
3J1–24240–10	.GRAPHIC, FUEL TANK	1	FOR MXR

5. Note that the illustrations for reference in finding parts numbers are not to be used for assembling. When assembling, please use the applicable service manual.

6. The asterisk (*) before a reference number indicates modified items after the first edition.

7. Applicable Serial No.

Engine Serial No.

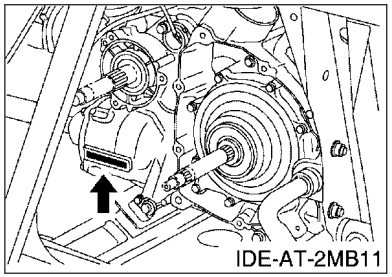

Frame Serial No.

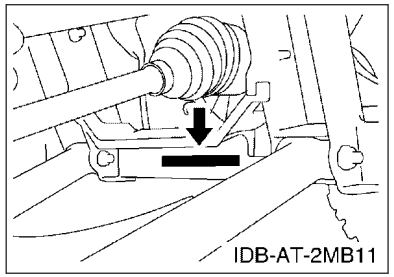

8. Applicable Colour Code (The (*) mark shows Model colour.)

Abbreviation	Colour Name	Colour Code
YB(*)	YAMAHA BLACK	0033

9. Quantity Column Information

Column No.	Name Of Q’ty Column	Destination
1	USA	U.S.A.

MODEL LABEL

(1) A label called “Model Label” is affixed in the location as indicated in (3) below.
When using this parts catalogue, please be sure to cross–reference the “model code – production code No.” in the catalogue with the “model code – production code No.” indicated on the Model Label affixed onto the product concerned.

(2) “Model Label” Indication

a	b
○ xxxx – xxx	
● x c	

a: Model Type Code
b: Production Code No.
c: Colouring Type

○ 4TW1–010
● A

(3) Model Label Affixing Location

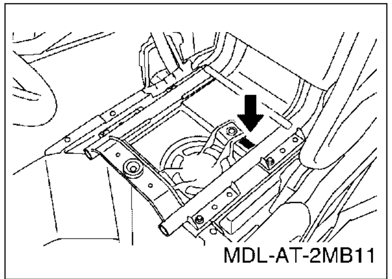

(4) Colouring Information

Model Code	Colouring Type Code	Colour Code	Colour Name	Abbrevia-tion
2MBG	P	0033	YAMAHA BLACK	YB

(5) Model Code – Production Code Number of Model Listed in This Parts Catalogue

Model Code	Production Code No.	Country (destination)	Model Code	Production Code No.	Country (destination)
2MBG	010	U.S.A.			

CONTENTS

ENGINE

CYLINDER HEAD....1
CYLINDER....2
CRANKSHAFT & PISTON....3
VALVE....5
CAMSHAFT & CHAIN....7
WATER PUMP....8
RADIATOR & HOSE....9
OIL PUMP....11
OIL PIPE....13
INTAKE....14
THROTTLE BODY ASSY 1....16
EXHAUST....17
CRANKCASE....18
CRANKCASE COVER 1....19
STARTER CLUTCH....21
CLUTCH....22
TRANSMISSION....24
MIDDLE DRIVE GEAR....26
SHIFT CAM & FORK....28
SHIFT SHAFT....29

CHASSIS

FRAME....31
FRONT FENDER....32
FENDER....34
SIDE COVER....35
SIDE COVER 2....37
REAR ARM....38
DRIVE SHAFT....39
FRONT DIFFERENTIAL....42
REAR SUSPENSION....45
FRONT SUSPENSION & WHEEL....46
STEERING....48
FUEL TANK....50
SEAT....52
SEAT 2....53
FRONT WHEEL....54
FRONT WHEEL 2....56
FRONT BRAKE CALIPER....58
REAR WHEEL....60
REAR WHEEL 2....62
REAR BRAKE CALIPER....64
PEDAL WIRE....66
MASTER CYLINDER....67
STAND & FOOTREST....69
CARRIER....70
GUARD....71
GUARD 2....72
GENERATOR....74
STARTING MOTOR....75
METER....76
HEADLIGHT....77
TAILLIGHT....78
ELECTRICAL 1....79
ELECTRICAL 2....81
EMBLEM & LABEL 1....82

INDEX

NUMERICAL INDEX....83

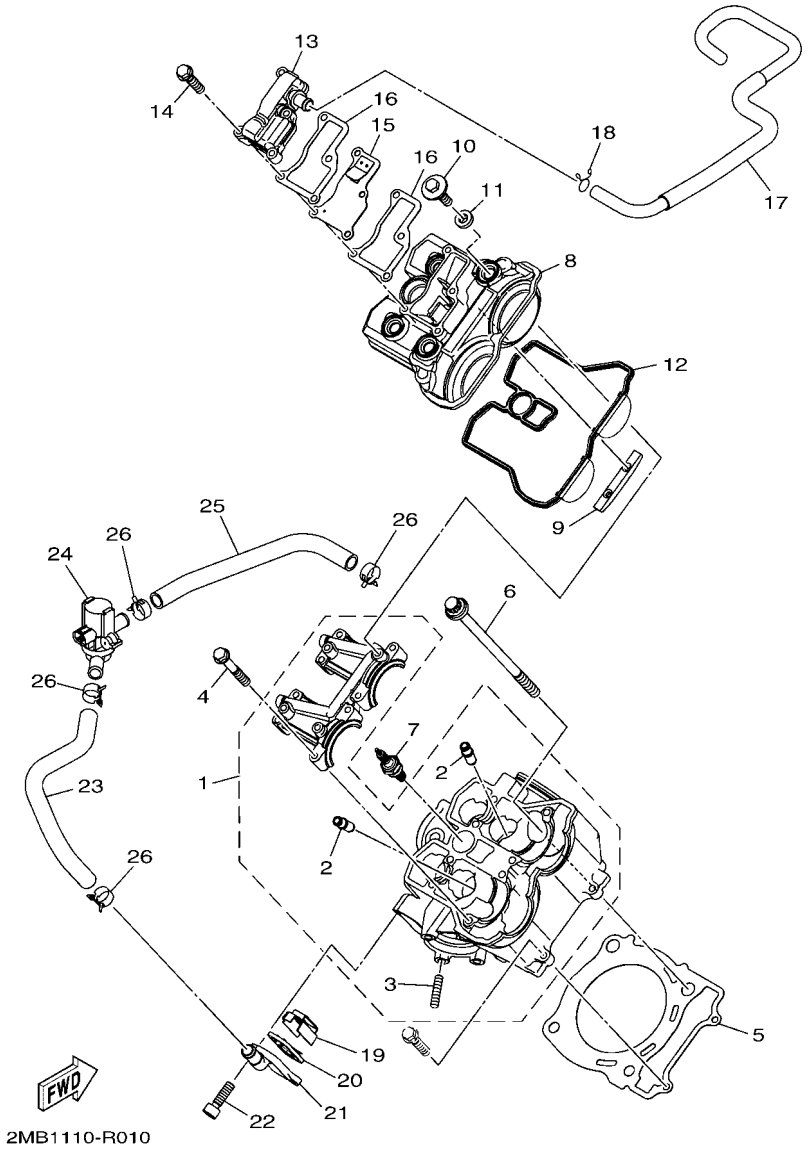

FIG. 1 CYLINDER HEAD

REF. NO.	PART NO.	DESCRIPTION	USA					REMARKS
1	2MB–E1102–00	CYLINDER HEAD ASSY	1					
2	2MB–E1133–10	.GUIDE, VALVE 1	4					
3	2MB–E1179–00	.BOLT, STUD	2					
4	2MB–E5481–80	BOLT 1	8					
5	2MB–E1181–00	GASKET, CYLINDER HEAD 1	1					
6	2MB–E1361–00	BOLT, CYLINDER HOLDING 1	4					
7	2MB–E119C–00	PLUG, SPARK (NGK CPR7EA)	1					
8	2MB–E1191–00	COVER, CYLINDER HEAD 1	1					
9	2MB–E2241–00	GUIDE, STOPPER 2	1					
10	2MB–E4446–00	BOLT	4					
11	2MB–E111G–00	RUBBER, MOUNT 1	4					
12	2MB–E1193–00	GASKET, HEAD COVER 1	1					
13	2MB–E1160–00	BREATHER ASSY	1					
14	2MB–E5481–20	BOLT 1	4					
15	2MB–E3610–00	REED VALVE ASSY	1					
16	2MB–E131B–00	GASKET, COVER	2					
17	2MB–E1166–00	PIPE, BREATHER 1	1					
18	90467–140A4	CLIP	1					
19	2MB–E482K–00	PLATE	1					
20	2MB–E4890–00	REED VALVE ASSY	1					
21	2MB–E4889–00	CAP, CASE	1					
22	2MB–E6777–10	BOLT	2					
23	1XD–E4881–00	HOSE, BEND 1	1					
24	2MB–14840–00	AIR CUT VALVE ASSY	1					
25	1XD–E4882–00	HOSE, BEND 2	1					
26	90467–17089	CLIP	4					

FIG. 2 CYLINDER

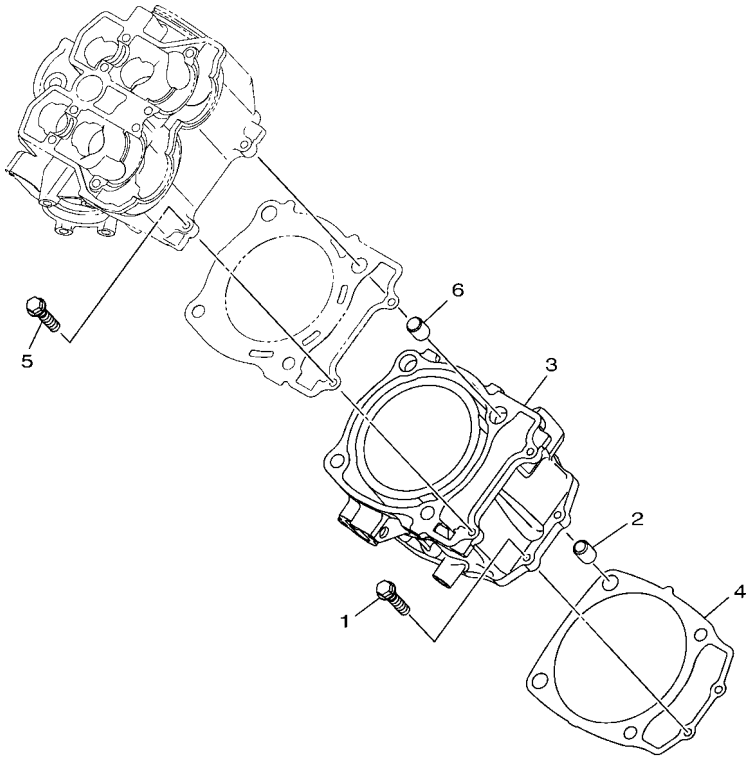

2MB1110-R020

REF. NO.	PART NO.	DESCRIPTION	USA					REMARKS
1	2MB–E5481–20	BOLT 1	2					
2	2MB–E5182–00	PIN, DOWEL	2					
3	2MB–E1311–00	CYLINDER 1	1					
4	2MB–E1351–00	GASKET, CYLINDER	1					
5	2MB–E5481–20	BOLT 1	2					
6	2MB–E5182–00	PIN, DOWEL	2					

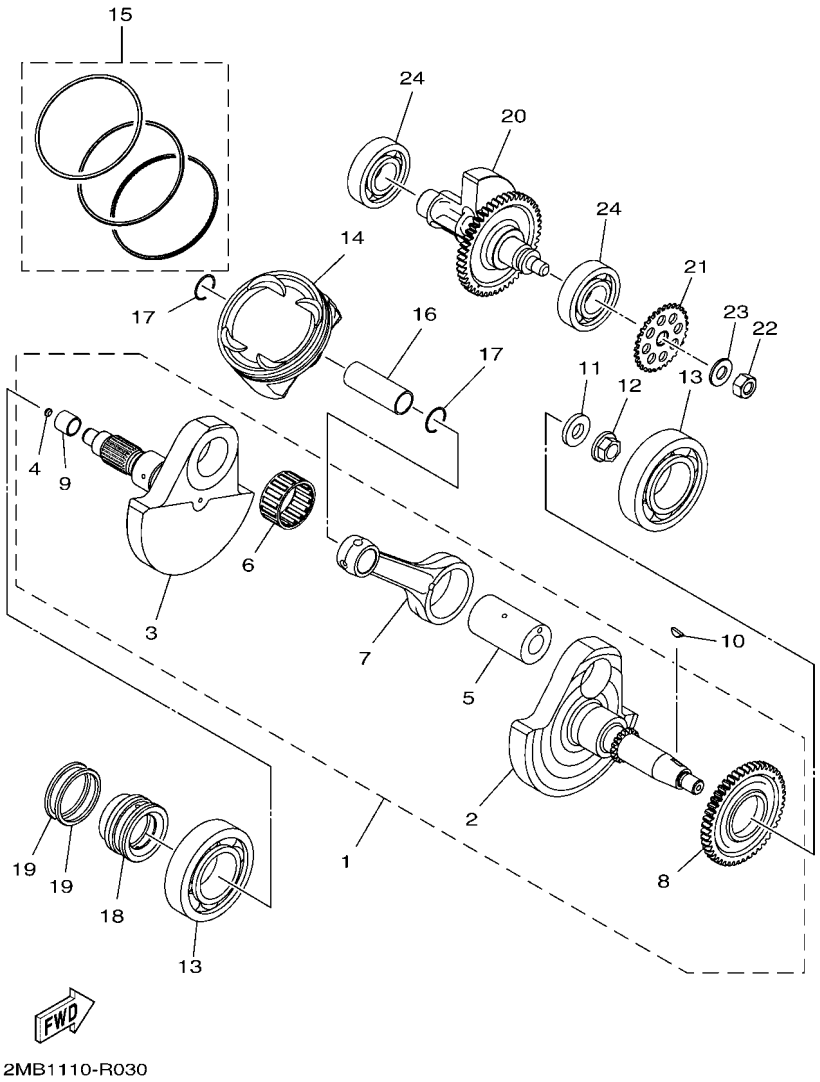

FIG. 3 CRANKSHAFT & PISTON

REF. NO.	PART NO.	DESCRIPTION	USA					REMARKS
1	2MB–E1400–00	CRANKSHAFT ASSY	1					
2	2MB–E1412–10	.CRANK 1	1					
3	2MB–E1422–10	.CRANK 2	1					
4	2MB–E1446–00	.PLUG, CRANK	1					
5	2MB–E1681–10	.PIN, CRANK 1	1					
6	2MB–E1415–00	.BEARING ASSY 1	1					
7	2MB–E1651–10	.ROD, CONNECTING	1					
8	2MB–E1536–00	.GEAR, DRIVE	1					
9	2MB–G6122–00	.RACE, INNER	1					
10	2MB–E1545–00	KEY, WOODRUFF	1					
11	2MB–E1557–00	WASHER 1	1					
12	2MB–E1555–00	NUT, CRANKSHAFT 1	1					
13	2MB–E1425–00	BEARING ASSY 2	2					
14	2MB–E1631–00	PISTON (STD)	1					
	2MB–E1635–00	PISTON (0.25MM O/S)	1					AP
	2MB–E1636–00	PISTON (0.50MM O/S)	1					AP
15	2MB–E1603–00	PISTON RING SET (STD)	1					
	2MB–E1604–00	PISTON RING SET (0.25MM O/S)	1					AP
	2MB–E1605–00	PISTON RING SET (0.50MM O/S)	1					AP
16	2MB–E1633–00	PIN, PISTON	1					
17	2MB–E1634–00	CLIP, PISTON PIN	2					
18	2MB–E6181–00	SPACER 1	1					
19	2MB–E1447–00	SEAL, CRANK	2					
20	2MB–E1500–00	BALANCER ASSY	1					
21	2MB–E3354–00	SPROCKET, DRIVE	1					
22	2MB–E1459–00	NUT, SPECIAL	1					
23	2MB–E1483–00	WASHER, WEIGHT 1	1					

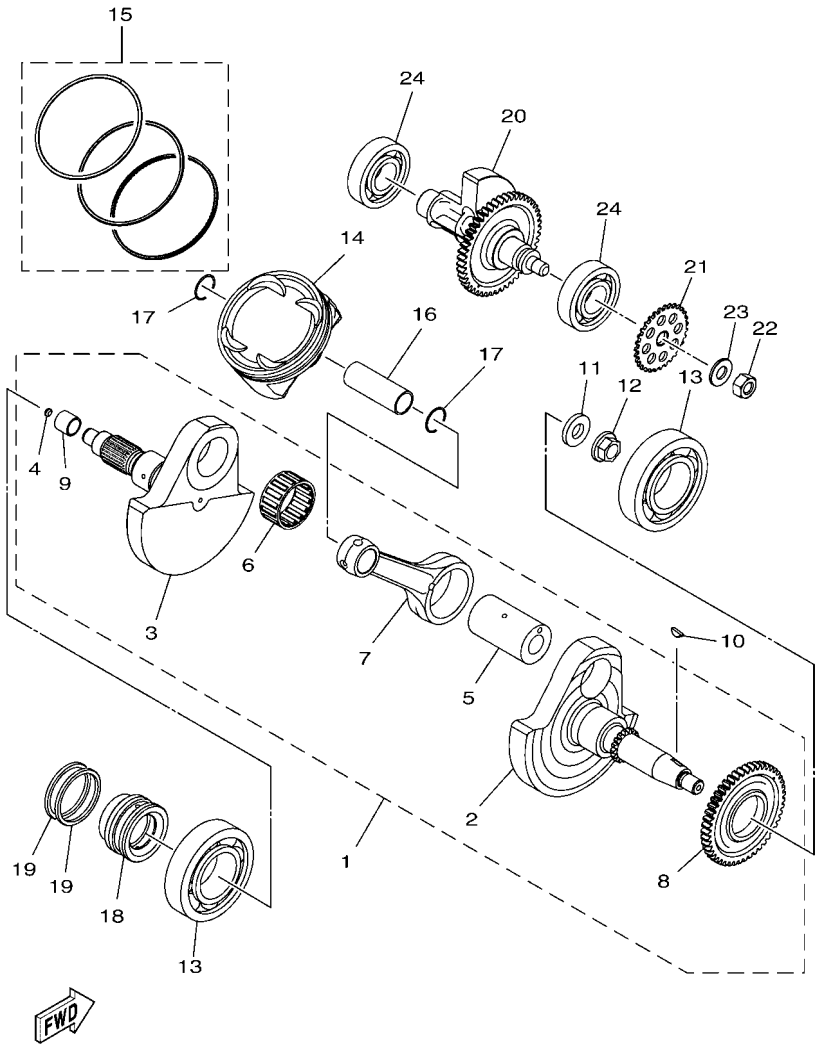

2MB1110-R030

FIG. 3 CRANKSHAFT & PISTON

REF. NO.	PART NO.	DESCRIPTION	USA					REMARKS
24	2MB–E1436–00	BEARING ASSY 3	2					

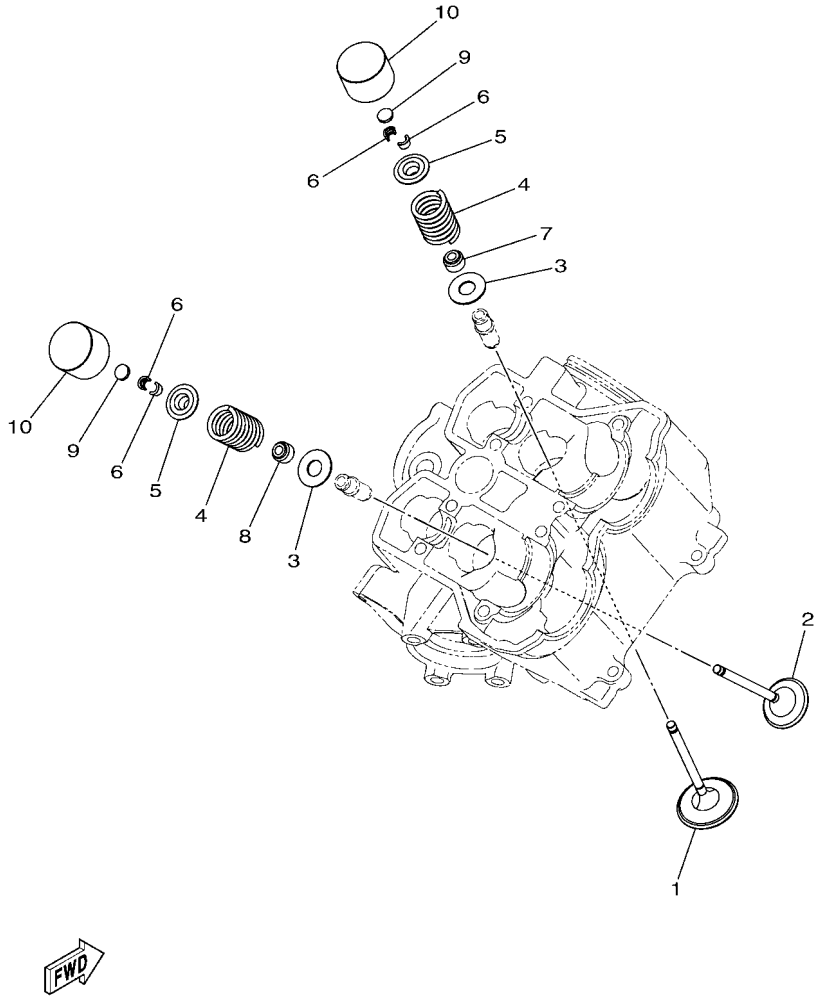

FIG. 4 VALVE

REF. NO.	PART NO.	DESCRIPTION	USA					REMARKS
1	2MB–E2111–00	VALVE, INTAKE	2					
2	2MB–E2121–00	VALVE, EXHAUST	2					
3	2MB–E2126–00	SEAT, VALVE SPRING 2	4					
4	2MB–E2113–00	SPRING, VALVE INNER	4					
5	2MB–E2117–00	RETAINER, VALVE SPRING	4					
6	2MB–E2118–00	LOCK, VALVE SPRING RETAINER	8					
7	2MB–E2119–00	SEAL, VALVE STEM	2					
8	2MB–E2129–00	SEAL, VALVE STEM	2					
9	2MB–E2168–A0	PAD, ADJUSTING (T:1.450)	4					UR
	2MB–E2168–F0	PAD, ADJUSTING (T:1.500)	4					UR
	2MB–E2168–H0	PAD, ADJUSTING (T:1.550)	4					UR
	2MB–E2168–K0	PAD, ADJUSTING (T:1.600)	4					UR
	2MB–E2168–L0	PAD, ADJUSTING (T:1.625)	4					UR
	2MB–E2168–M0	PAD, ADJUSTING (T:1.650)	4					UR
	2MB–E2168–N0	PAD, ADJUSTING (T:1.675)	4					UR
	2MB–E2168–R0	PAD, ADJUSTING (T:1.700)	4					UR
	2MB–E2168–T0	PAD, ADJUSTING (T:1.725)	4					UR
	2MB–E2168–U0	PAD, ADJUSTING (T:1.750)	4					UR
	2MB–E2168–V0	PAD, ADJUSTING (T:1.775)	4					UR
	2MB–E2168–W0	PAD, ADJUSTING (T:1.800)	4					UR
	2MB–E2168–X0	PAD, ADJUSTING (T:1.825)	4					UR
	2MB–E2168–Y0	PAD, ADJUSTING (T:1.850)	4					UR
	2MB–E2169–00	PAD, ADJUSTING (T:1.875)	4					UR
	2MB–E2169–10	PAD, ADJUSTING (T:1.900)	4					UR
	2MB–E2169–20	PAD, ADJUSTING (T:1.925)	4					UR
	2MB–E2169–30	PAD, ADJUSTING (T:1.950)	4					UR
	2MB–E2169–40	PAD, ADJUSTING (T:1.975)	4					UR

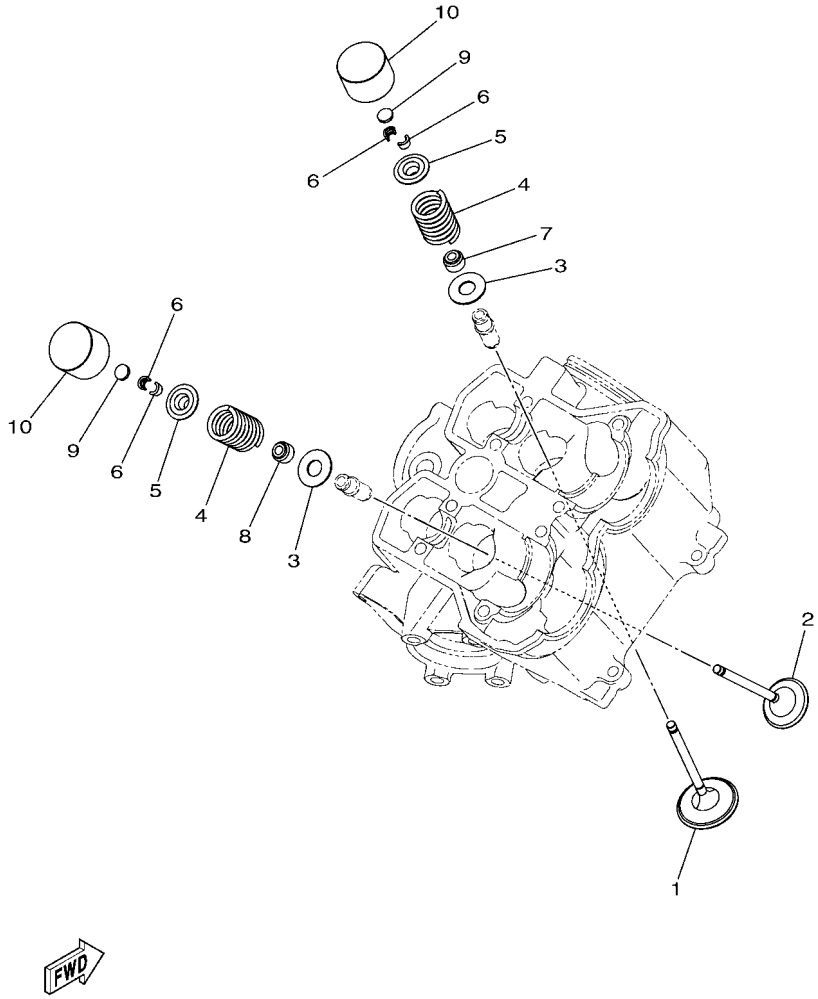

FIG. 4 VALVE

REF. NO.	PART NO.	DESCRIPTION	USA					REMARKS
9	2MB–E2169–50	PAD, ADJUSTING (T:2.000)	4					UR
	2MB–E2169–60	PAD, ADJUSTING (T:2.025)	4					UR
	2MB–E2169–70	PAD, ADJUSTING (T:2.050)	4					UR
	2MB–E2169–80	PAD, ADJUSTING (T:2.075)	4					UR
	2MB–E2169–90	PAD, ADJUSTING (T:2.100)	4					UR
	2MB–E2169–A0	PAD, ADJUSTING (T:2.125)	4					UR
	2MB–E2169–E0	PAD, ADJUSTING (T:2.150)	4					UR
	2MB–E2169–G0	PAD, ADJUSTING (T:2.200)	4					UR
	2MB–E2169–J0	PAD, ADJUSTING (T:2.250)	4					UR
	2MB–E2169–L0	PAD, ADJUSTING (T:2.300)	4					UR
10	2MB–E2153–00	LIFTER, VALVE	4					

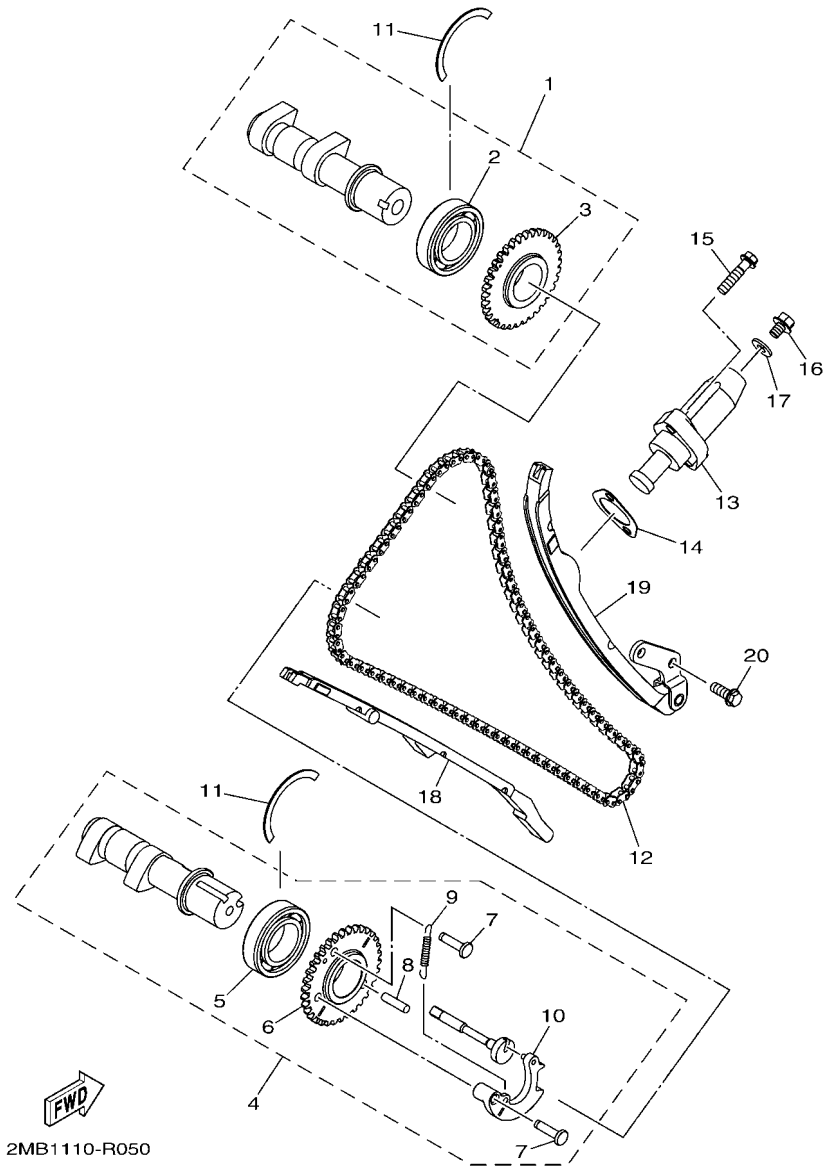

FIG. 5 CAMSHAFT & CHAIN

REF. NO.	PART NO.	DESCRIPTION	USA					REMARKS
1	2MB–E2170–00	CAMSHAFT ASSY 1	1					
2	2MB–E2179–00	.BEARING, CAMSHAFT 1	1					
3	2MB–E2176–00	.SPROCKET, CAM CHAIN	1					
4	2MB–E2180–01	CAMSHAFT ASSY 2	1					
5	2MB–E2179–00	.BEARING, CAMSHAFT 1	1					
6	2MB–E2177–00	.SPROCKET, CAM CHAIN	1					
7	2MB–H431W–00	.PIVOT	2					
8	2MB–E2284–00	.PIN, DECOMPRESSION LEVER	1					
9	2MB–E2287–01	.SPRING, DECOMPRESSION	1					
10	2MB–E217A–00	.WEIGHT	1					
11	2MB–E2842–00	CIRCLIP	2					
12	2MB–E2190–00	CHAIN ASSY	1					
13	2MB–E2210–00	TENSIONER ASSY, CAM CHAIN	1					
14	2MB–E2213–00	GASKET, TENSIONER CASE	1					
15	2MB–E5481–20	BOLT 1	2					
16	2MB–E5481–00	BOLT 1	1					
17	2MB–E21E2–00	GASKET	1					
18	2MB–E2251–00	DAMPER, CHAIN 1	1					
19	2MB–E2252–00	DAMPER, CHAIN 2	1					
20	2MB–E5482–00	BOLT 2	2					

FIG. 6 WATER PUMP

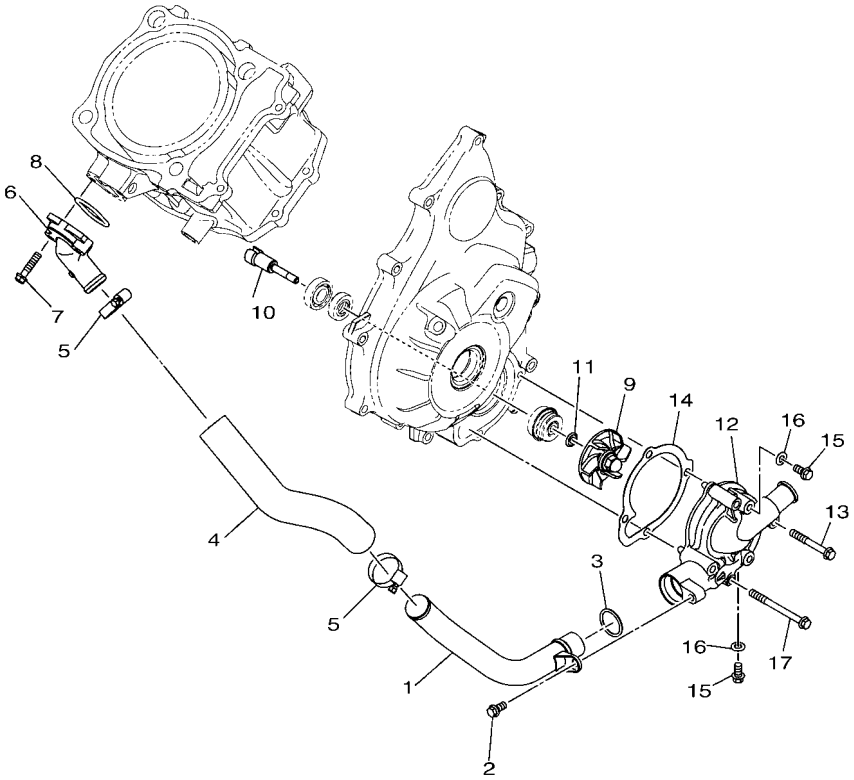

2MB1110-R060

REF. NO.	PART NO.	DESCRIPTION	USA					REMARKS
1	2MB–E2481–00	PIPE 1	1					
2	2MB–E5481–60	BOLT 1	1					
3	2MB–E2439–00	O-RING	1					
4	2MB–E243F–00	HOSE,3	1					
5	2MB–E1387–00	CLAMP, HOSE 1	2					
6	2MB–E2469–00	JOINT 1	1					
7	2MB–E5481–20	BOLT 1	2					
8	2MB–E2843–00	O-RING	1					
9	2MB–E2451–00	IMPELLER, WATER PUMP	1					
10	2MB–E2458–00	SHAFT, IMPELLER	1					
11	2MB–E243M–00	SEAL, WATER PUMP	1					
12	2MB–E2422–00	COVER, HOUSING	1					
13	2MB–E5481–B0	BOLT 1	3					
14	2MB–E2428–00	GASKET, HOUSING COVER 2	1					
15	2MB–E5481–60	BOLT 1	2					
16	2MB–E2435–00	GASKET	2					
17	2MB–E5481–70	BOLT 1	1					

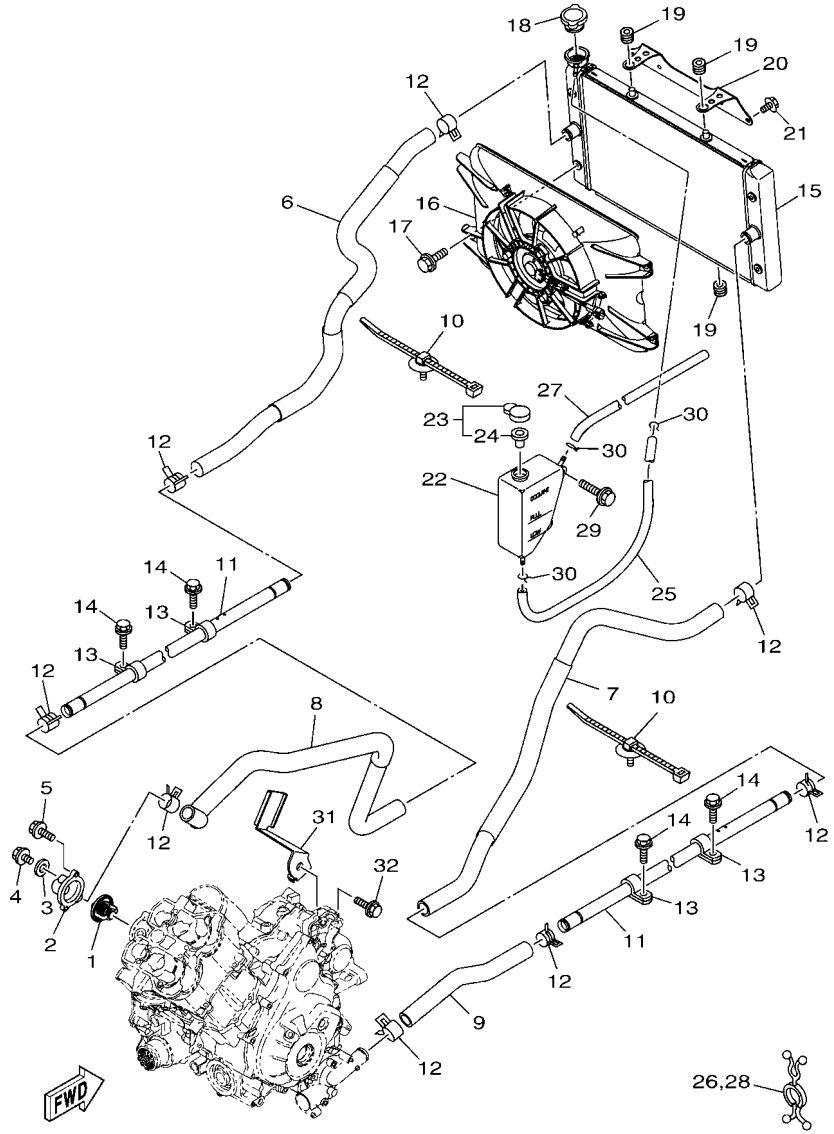

2MB1110-R070

FIG. 7 RADIATOR & HOSE

REF. NO.	PART NO.	DESCRIPTION	USA					REMARKS
1	2MB–E2411–00	THERMOSTAT	1					
2	2MB–E2413–00	COVER, THERMOSTAT	1					
3	2MB–E2435–00	GASKET	1					
4	2MB–E5481–60	BOLT 1	1					
5	2MB–E5481–10	BOLT 1	2					
6	1XD–E2576–00	HOSE 1	1					
7	1XD–E2577–00	HOSE 2	1					
8	2MB–E2578–00	HOSE 3	1					
9	1XD–E2579–00	HOSE 4	1					
10	1NS–F1338–00	CLAMP	5					
11	2MB–E2483–00	PIPE 3	2					
12	90467–26189	CLIP	8					
13	90461–12800	CLAMP	4					
14	90105–06831	BOLT, FLANGE	4					
15	1XD–E2461–00	RADIATOR COMP	1					
16	1XD–E2405–00	BLOWER ASSY	1					
17	1XD–E2675–00	BOLT, BLOWER HOLDING	4					
18	1XD–E2462–00	CAP, RADIATOR	1					
19	90480–15235	GROMMET	4					
20	2MB–E2518–00	BRACKET, WATER COOLER	1					
21	90119–06868	BOLT, WITH WASHER	2					
22	1XD–F1871–00	TANK, RECOVERY	1					
23	1AA–21815–00	CAP	1					
24	1AA–21874–00	.GASKET	1					
25	90445–08846	HOSE (L920)	1					
26	90464–29179	CLAMP	1					
27	90445–08845	HOSE (L760)	1					

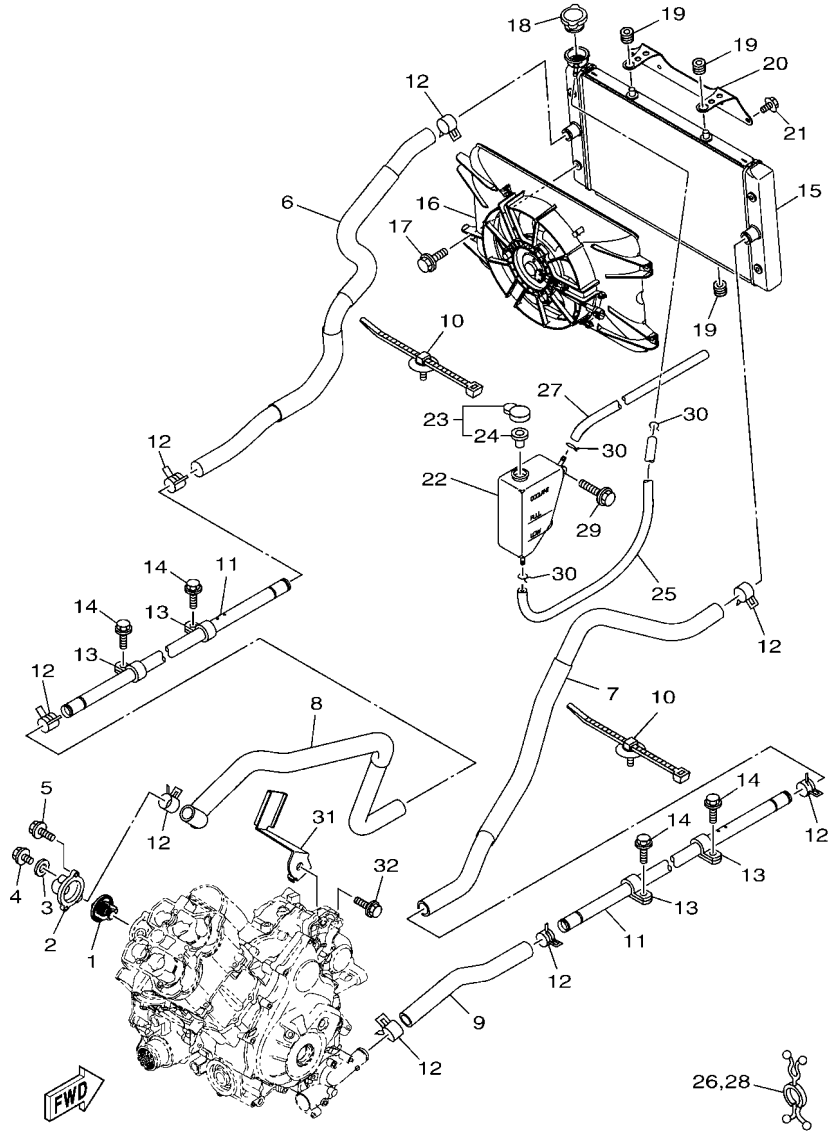

FIG. 7 RADIATOR & HOSE

REF. NO.	PART NO.	DESCRIPTION	USA					REMARKS
28	90464–29179	CLAMP	1					
29	90119–06868	BOLT, WITH WASHER	2					
30	90467–08003	CLIP	3					
31	1XD–E2443–00	STAY	1					
32	95822–10040	BOLT, FLANGE	1					

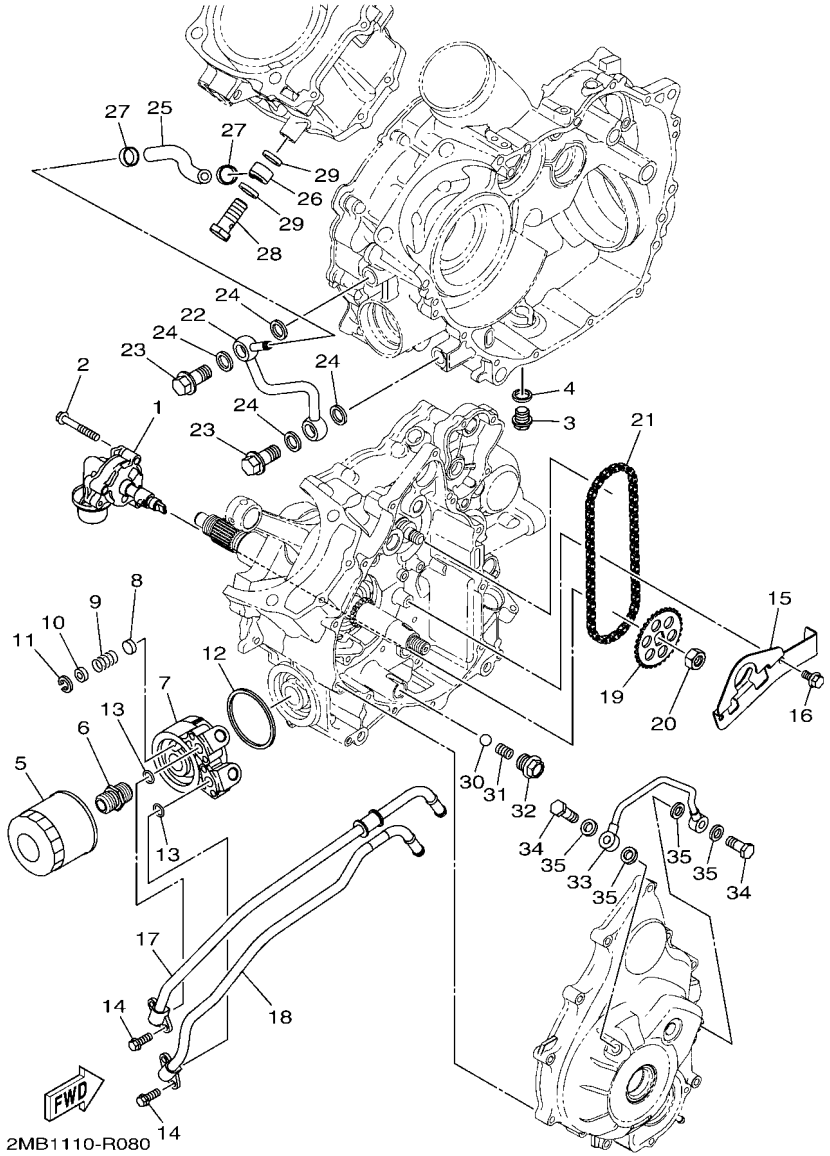

FIG. 8 OIL PUMP

REF. NO.	PART NO.	DESCRIPTION	USA					REMARKS
1	2MB–E3300–00	OIL PUMP ASSY	1					
2	2MB–E5481–30	BOLT 1	3					
3	2MB–E8149–00	PLUG, BLIND	1					
4	2MB–E1198–00	GASKET	1					
5	2MB–E3440–00	ELEMENT ASSY, OIL CLEANER	1					
6	2MB–E3573–00	BOLT 1	1					
7	2MB–E3461–00	PLATE, ADAPTOR	1					
8	2MB–E3497–00	PLUG	1					
9	2MB–E3484–00	SPRING, RELIEF	1					
10	2MB–E3177–00	WASHER	1					
11	2MB–E2489–00	CLIP 4	1					
12	2MB–E3016–00	O-RING	1					
13	2MB–E319C–00	O-RING	2					
14	2MB–E5481–E0	BOLT 1	4					
15	2MB–E2221–00	GUIDE, STOPPER 3	1					
16	2MB–E5481–40	BOLT 1	2					
17	2MB–E3416–00	PIPE, OIL 1	1					
18	2MB–E3418–00	PIPE, OIL 2	1					
19	2MB–E3355–00	SPROCKET, DRIVEN	1					
20	2MB–E1459–00	NUT, SPECIAL	1					
21	2MB–E1456–00	CHAIN, PRIMARY	1					
22	2MB–E3171–00	PIPE, DELIVERY 2	1					
23	2MB–E3165–00	BOLT, BANJO	2					
24	2MB–E8363–00	GASKET	4					
25	2MB–E316F–00	HOSE, OIL 1	1					
26	2MB–E3181–00	PIPE, DELIVERY 3	1					
27	2MB–E5485–00	CLAMP	2					

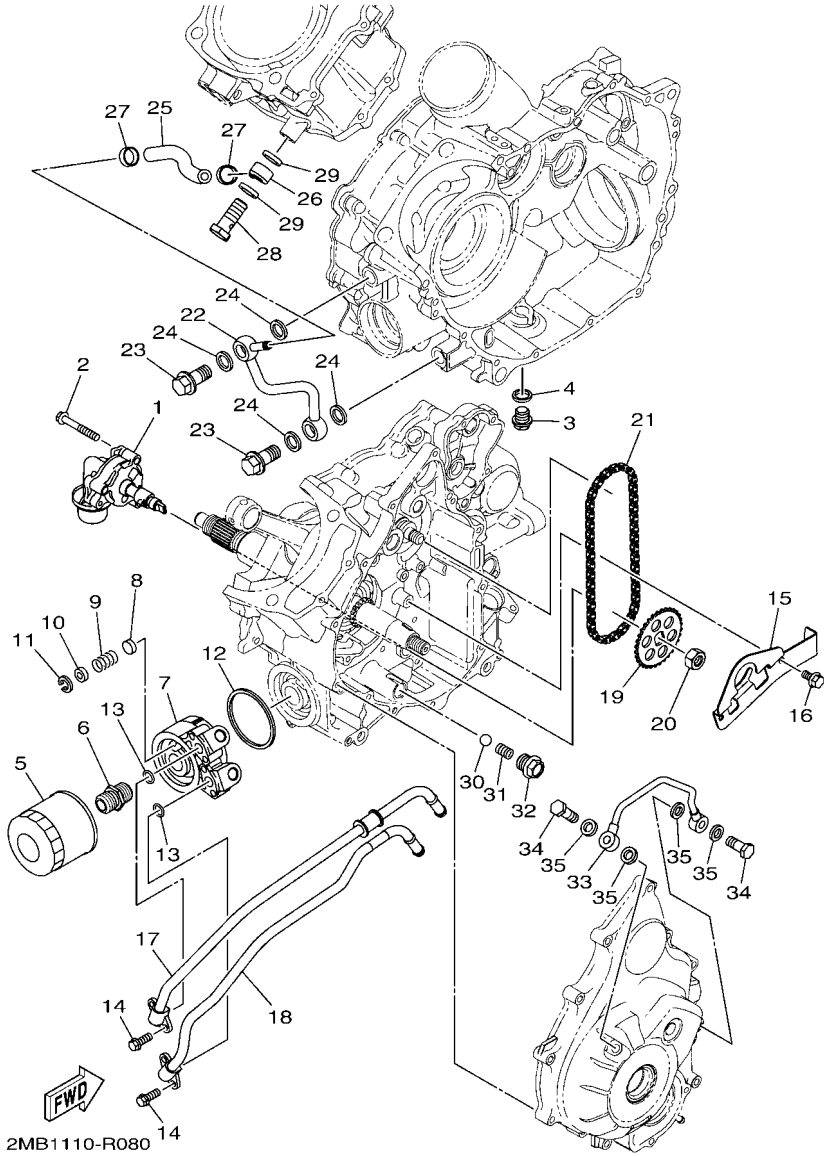

FIG. 8 OIL PUMP

REF. NO.	PART NO.	DESCRIPTION	USA					REMARKS
28	2MB–E3166–00	BOLT, BANJO	1					
29	2MB–E1195–00	GASKET	2					
30	2MB–E8218–00	BALL	1					
31	2MB–E3469–00	SPRING	1					
32	2MB–E3455–00	PLUG	1					
33	2MB–E3161–00	PIPE, DELIVERY 1	1					
34	2MB–E2858–00	BOLT, UNION	2					
35	2MB–E3476–00	GASKET	4					

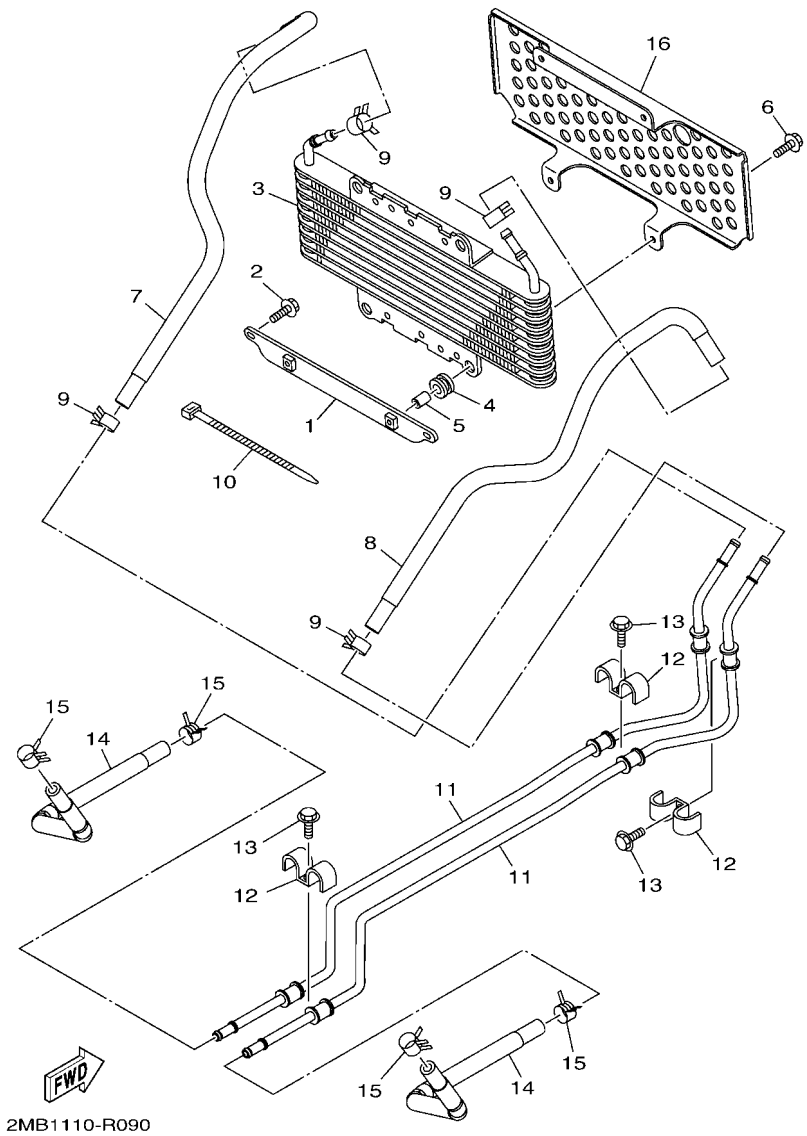

FIG. 9 OIL PIPE

REF. NO.	PART NO.	DESCRIPTION	USA					REMARKS
1	2MB–F1498–00	BRACKET, OIL COOLER	1					
2	90119–06868	BOLT, WITH WASHER	2					
3	1NS–E3480–00	ELEMENT, OIL COOLER	1					
4	90480–15235	GROMMET	4					
5	90387–06113	COLLAR	4					
6	95812–06025	BOLT, FLANGE	4					
7	2MB–E243A–01	HOSE 1	1					
8	2MB–E2577–01	HOSE 2	1					
9	90467–150A0	CLIP	4					
10	90464–48800	CLAMP	1					
11	2MB–E3405–01	OIL PIPE COMP. 1	2					
12	90462–15800	CLAMP	3					
13	90105–06832	BOLT, FLANGE	3					
14	2MB–E2551–01	HOSE 7	2					
15	90467–150A0	CLIP	4					
16	2MB–E3691–00	BRACKET, AIR COOLER	1					

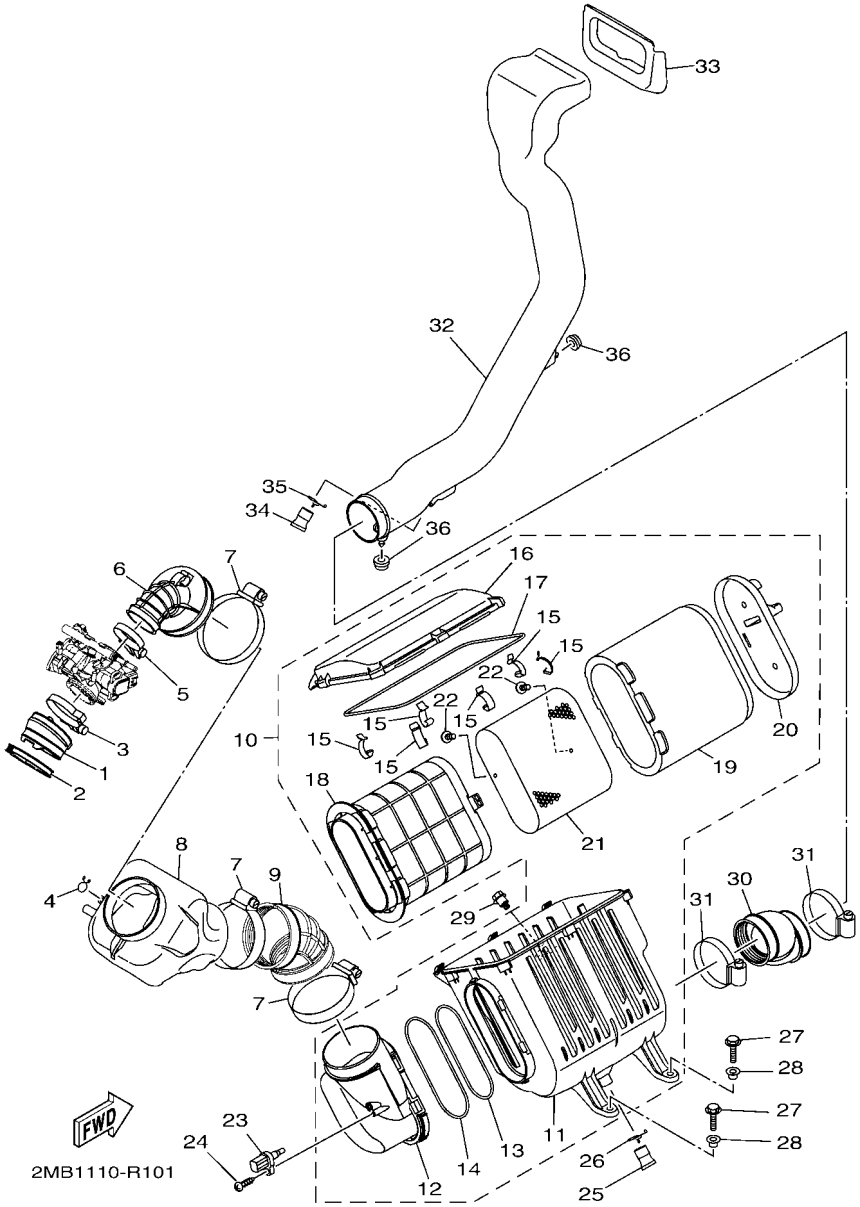

FIG. 10 INTAKE

REF. NO.	PART NO.	DESCRIPTION	USA					REMARKS
1	2MB–E3586–00	JOINT, CARBURETOR 1	1					
2	2MB–E1388–00	CLAMP, HOSE 2	1					
3	90450–72004	HOSE CLAMP ASSY	1					
4	90467–16063	CLIP	1					
5	90450–59009	HOSE CLAMP ASSY	1					
6	1XD–E4453–00	JOINT, AIR CLEANER 1	1					
7	90450–99004	HOSE CLAMP ASSY	3					
8	1XD–E4431–00	SILENCER, INTAKE 1	1					
9	1XD–E4463–00	JOINT, AIR CLEANER 2	1					
10	1XD–E4410–02	AIR CLEANER ASSY.	1					
11	1XD–E4411–01	.CASE, AIR CLEANER 1	1					
12	1XD–E4458–00	.GUIDE	1					
13	1XD–E4462–01	.SEAL	1					
14	1XD–E4467–00	.SEAL	1					
15	3B4–14424–00	.CLIP, CAP FITTING	6					
16	1XD–E4412–01	.CAP, CLEANER CASE 1	1					
17	1XD–E4452–00	.SEAL	1					
18	1XD–E4472–00	.PLATE, ELEMENT	1					
19	1XD–E4451–00	.ELEMENT, AIR CLEANER	1					
20	1XD–E4417–00	.COVER 1	1					
21	1XD–E441B–00	.NET 1	1					
22	1XD–E4429–00	.SCREW	2					
23	8FP–85886–00	SENSOR, AIR TEMPERATURE	1					
24	97702–50520	SCREW, TAPPING	1					
25	59V–14457–00	SEAL	1					
26	90467–220A1	CLIP	1					
27	90105–06833	BOLT, FLANGE	2					

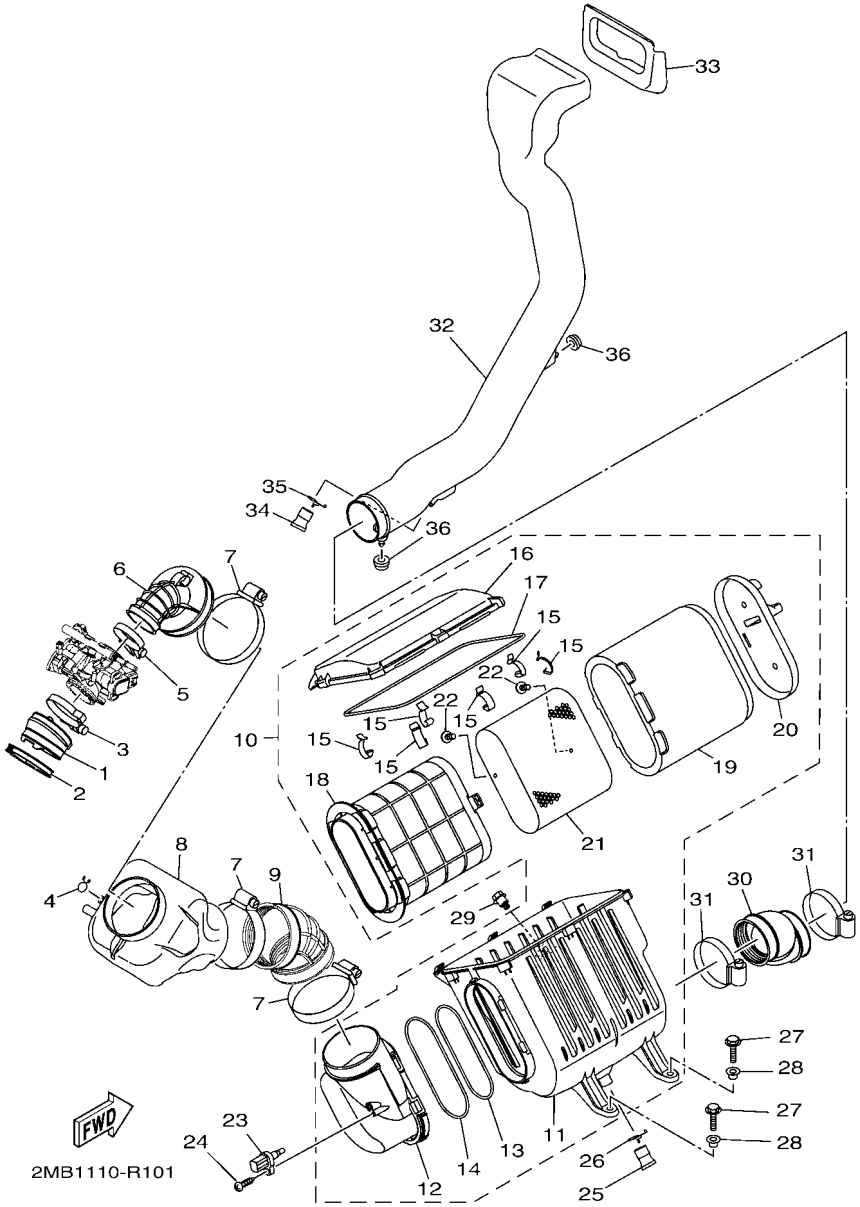

FIG. 10 INTAKE

REF. NO.	PART NO.	DESCRIPTION	USA					REMARKS
28	90387–07037	COLLAR	2					
29	90109–06262	BOLT	1					
30	2MB–E4476–00	SEAL	1					
31	90450–94001	HOSE CLAMP ASSY	2					
32	2PG–E443A–00	DUCT	1					
33	2MB–F839U–00	GASKET, DUCT	1					
34	59V–14457–00	SEAL	1					
35	90467–220A1	CLIP	1					
36	90480–13567	GROMMET	2					

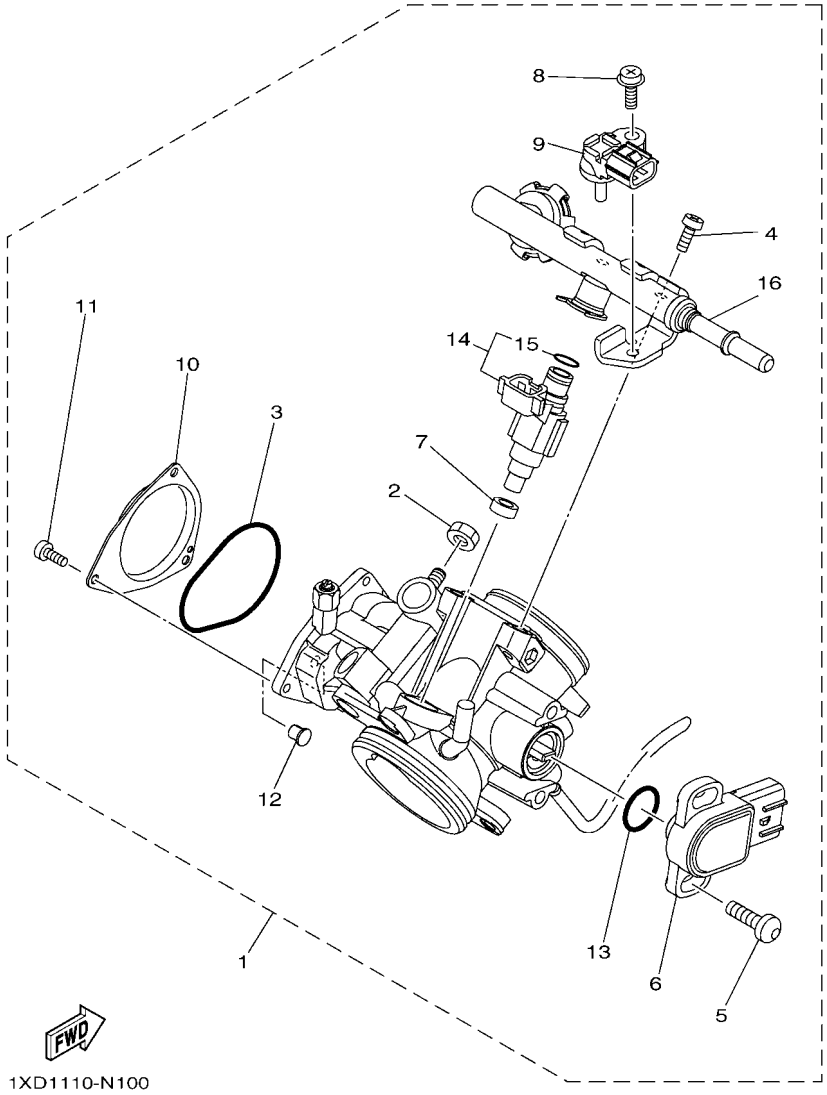

FIG. 11 THROTTLE BODY ASSY 1

REF. NO.	PART NO.	DESCRIPTION	USA					REMARKS
1	2MB–13750–00	THROTTLE BODY ASSY	1					
2	1S3–14161–00	.NUT, CABLE ADJUSTING	1					
3	5LP–14147–00	.O-RING	1					
4	92502–06012	.SCREW, PAN HEAD	2					
5	8CC–14216–10	.SCREW	2					
6	3B4–85885–00	.THROTTLE SENSOR ASSY	1					
7	8FP–13556–00	.RUBBER, INJECTOR	1					
8	2C0–14216–00	.SCREW	1					
9	5S7–82380–00	.SENSOR, PRESSURE	1					
10	5UG–14293–00	.COVER 1	1					
11	98502–04006	.SCREW, PAN HEAD	3					
12	1UY–14155–00	.GUIDE, CABLE	1					
13	5YP–14562–00	.O-RING	1					
14	1XD–13761–00	.INJECTOR	1					
15	1XD–14147–00	..O-RING	1					
16	1XD–13160–00	.DELIVERY PIPE ASSY 1	1					

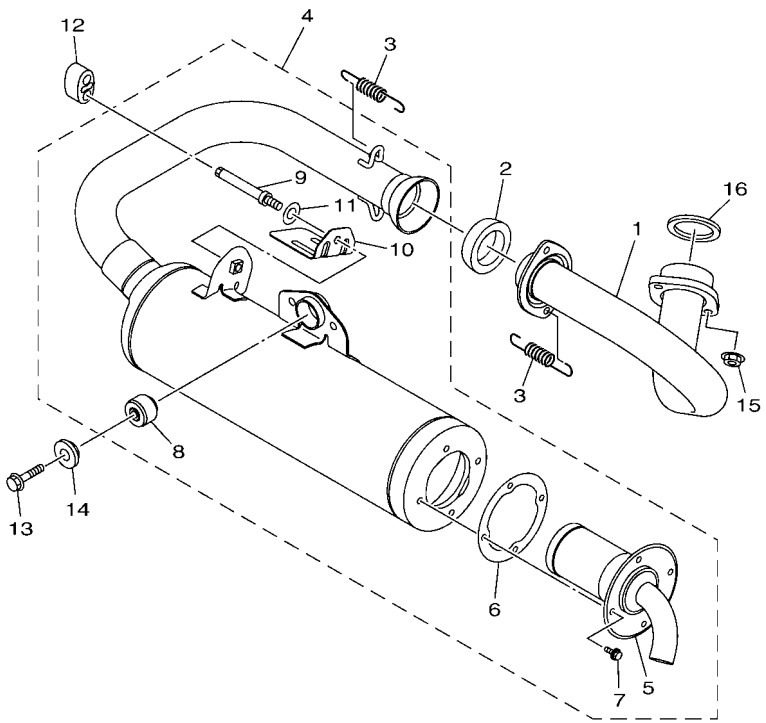

2MB1110-R120

FIG. 12 EXHAUST

REF. NO.	PART NO.	DESCRIPTION	USA					REMARKS
1	2MB–E4611–00	PIPE, EXHAUST 1	1					
2	2MB–E4714–00	GASKET, MUFFLER	1					
3	90506–26012	SPRING, TENSION	2					
4	2MB–E4710–00	MUFFLER ASSY 1	1					
5	2BG–E4780–00	.SPARK ARRESTER ASSY	1					
6	2MB–E4755–00	.GASKET, SILENCER	1					
7	95022–06012	.BOLT, FLANGE	4					
8	1HP–F7414–00	.DAMPER, FOOTREST	1					
9	1XD–E4745–00	.SHAFT	1					
10	2MB–E4793–00	.PLATE, MUFFLER	1					
11	92902–08200	.WASHER	1					
12	2MB–14737–00	DAMPER, MUFFLER	1					
13	95812–08040	BOLT, FLANGE	1					
14	3B4–14759–01	WASHER	1					
15	95702–08500	NUT, FLANGE	2					
16	3EG–14613–00	GASKET, EXHAUST PIPE	1					

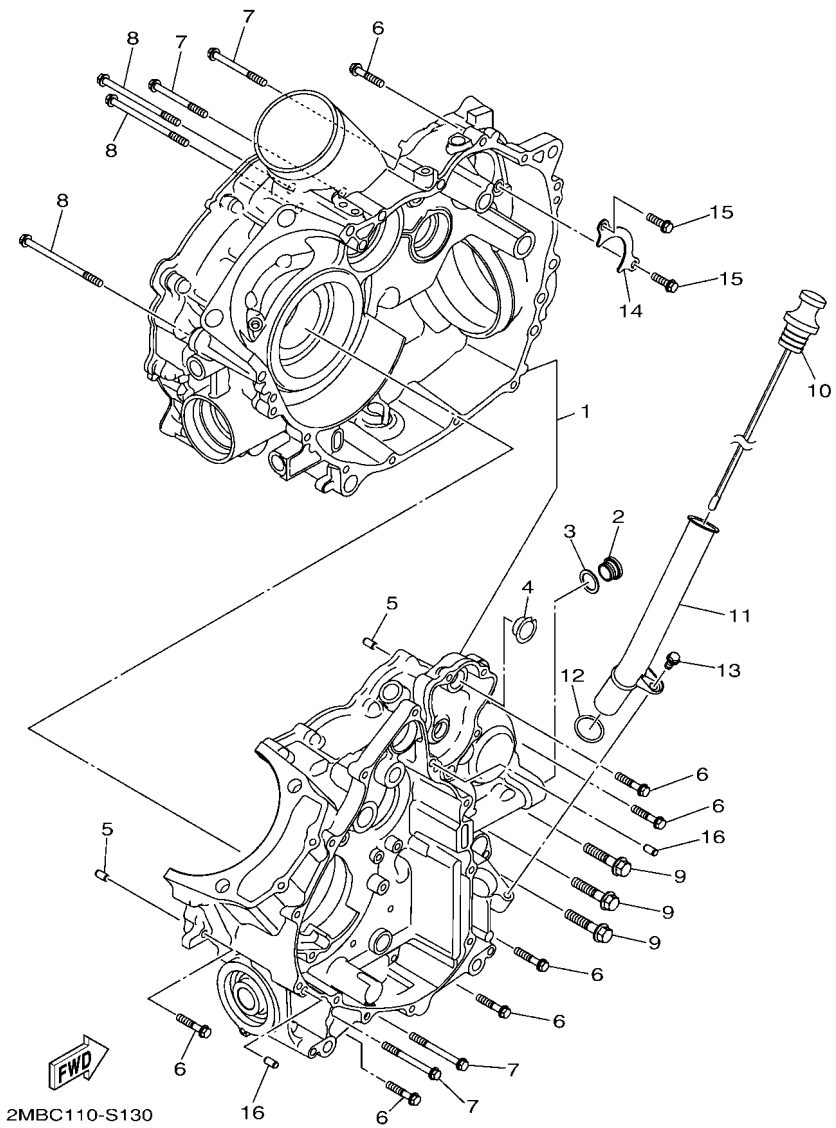

FIG. 13 CRANKCASE

REF. NO.	PART NO.	DESCRIPTION	USA					REMARKS
1	2MB–E5100–01	CRANKCASE ASSY	1					
2	2MB–E5167–00	PLUG, BLIND 1	1					
3	2MB–E5175–00	GASKET, BLIND PLUG 1	1					
4	2MB–E8581–00	SPACER, CAM SHAFT	1					
5	2MB–E5184–00	PIN, DOWEL	2					
6	2MB–E5481–50	BOLT 1	7					
7	2MB–E5481–C0	BOLT 1	4					
8	2MB–E5481–90	BOLT 1	3					
9	2MB–E2623–00	BOLT	3					
10	2MB–E5362–01	PLUG, OIL LEVEL	1					
11	2MB–E5112–00	PIPE, OIL	1					
12	2MB–E2439–00	O-RING	1					
13	2MB–E5481–60	BOLT 1	1					
14	2MB–E5388–00	PLATE, BEARING COVER	1					
15	2MB–E5481–10	BOLT 1	2					
16	2MB–E5184–00	PIN, DOWEL	2					

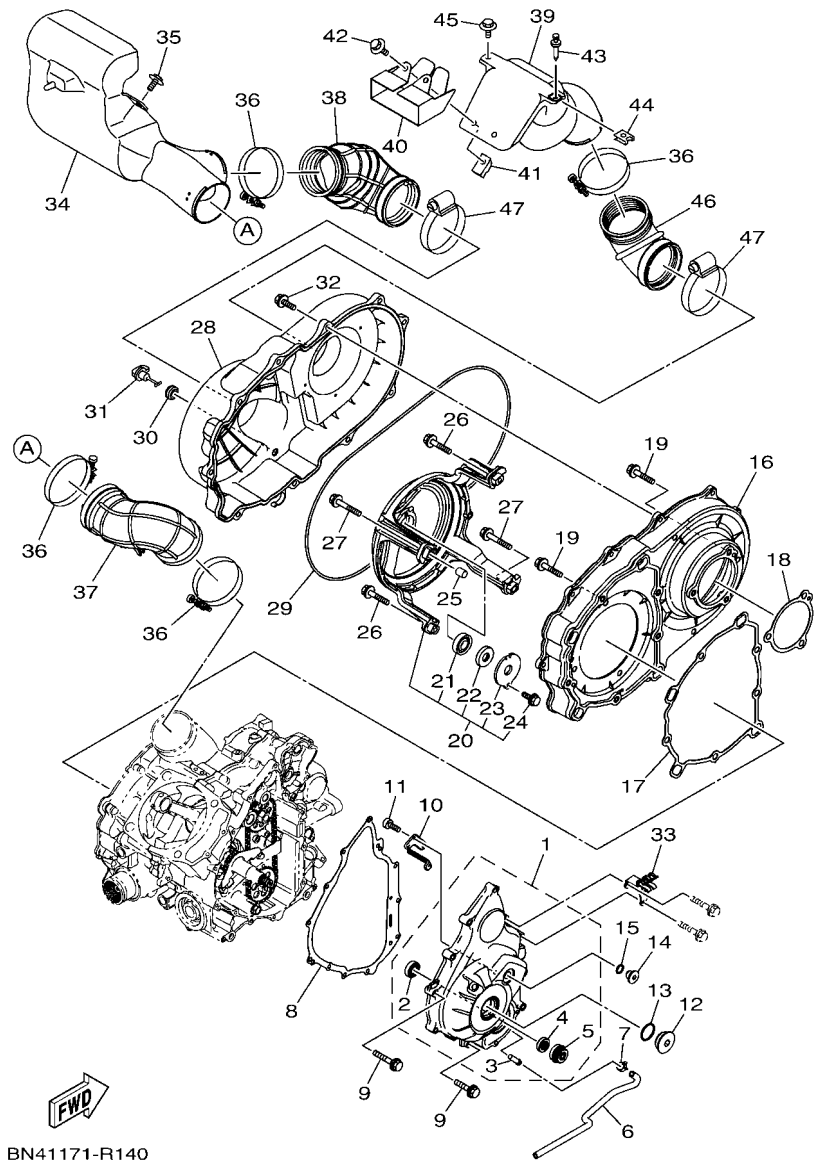

FIG. 14 CRANKCASE COVER 1

REF. NO.	PART NO.	DESCRIPTION	USA					REMARKS
1	2MB–E5409–00	CRANKCASE COVER ASSY	1					
2	2MB–E5596–00	.BEARING	1					
3	2MB–E243K–00	.PIPE, DRAIN	1					
4	2MB–E511A–00	.OIL SEAL	1					
5	2MB–E2438–00	.SEAL, MECHANICAL	1					
6	2MB–E244H–00	HOSE 5	1					
7	2MB–E5179–00	CLIP	1					
8	2MB–E5451–00	GASKET, CRANKCASE COVER 1	1					
9	2MB–E5481–50	BOLT 1	11					
10	2MB–E5113–00	PLATE	1					
11	2MB–E5187–00	BOLT	2					
12	2MB–E5168–00	PLUG, BLIND 2	1					
13	2MB–E511C–00	O-RING	1					
14	2MB–E5169–00	PLUG, BLIND 2	1					
15	2MB–E4G97–00	O-RING	1					
16	2MB–E5421–00	COVER, CRANKCASE 2	1					
17	2MB–E5453–00	GASKET	1					
18	2MB–E5315–00	SEAL, CRANKCASE	1					
19	2MB–E5482–10	BOLT 2	8					
20	2MB–E5480–00	HOUSING ASSY	1					
21	2MB–E5693–00	.BEARING	1					
22	2MB–E4005–00	.OIL SEAL	1					
23	2MB–E5381–00	.PLATE, BEARING COVER	1					
24	2MB–E5482–00	.BOLT 2	1					
25	2MB–E5181–00	PIN, DOWEL	2					
26	2MB–E5482–10	BOLT 2	2					
27	2MB–E5482–30	BOLT 2	2					

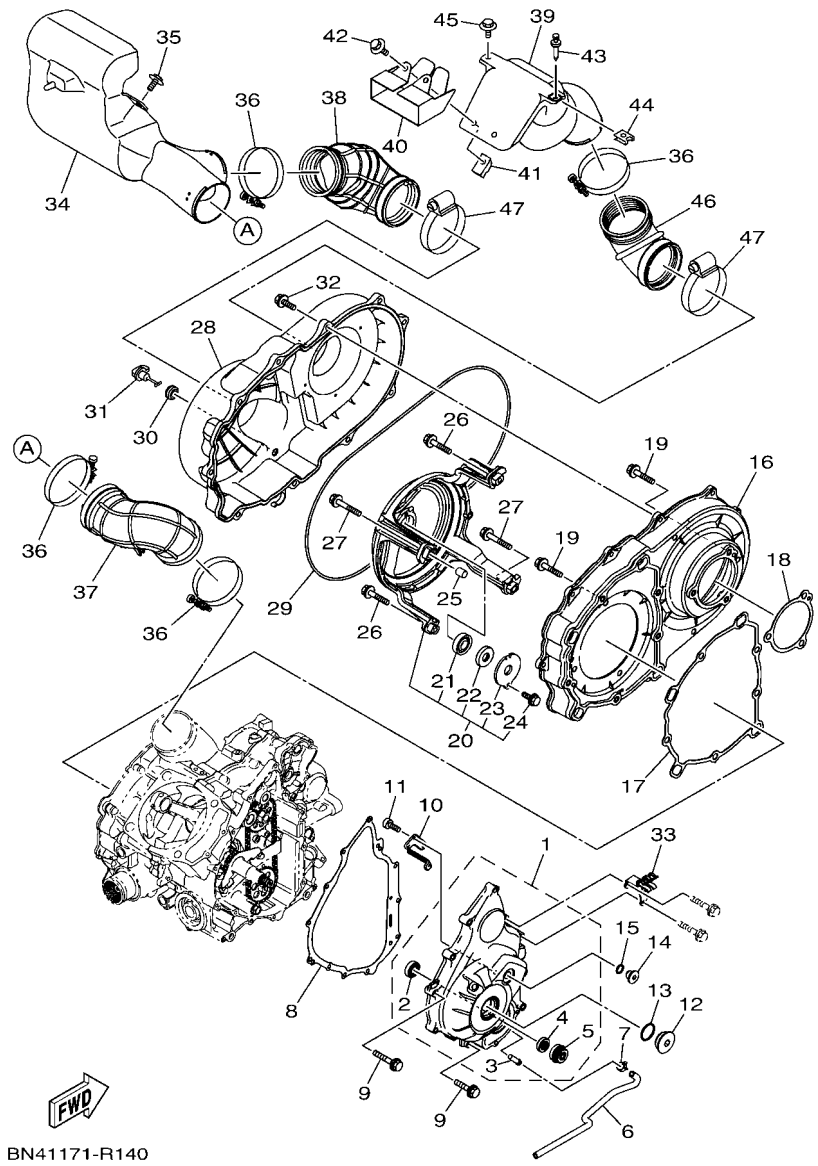

FIG. 14 CRANKCASE COVER 1

REF. NO.	PART NO.	DESCRIPTION	USA					REMARKS
28	2MB–E5431–00	COVER, CRANKCASE 3	1					
29	2MB–E5379–00	SEAL, CRANKCASE	1					
30	2MB–E5365–00	GROMMET	1					
31	2MB–E5351–00	PLUG, DRAIN	1					
32	2MB–E5768–00	BOLT	11					
33	2MB–E3487–00	GUIDE, OIL HOSE	1					
34	2MB–E5477–00	DUCT, AIR	1					
35	90119–06868	BOLT, WITH WASHER	1					
36	90460–85135	CLAMP, HOSE	4					
37	2MB–E5474–00	SEAL, AIR DUCT	1					
38	2MB–E547B–01	SEAL, AIR DUCT	1					
39	2MB–E5473–00	DUCT, AIR	1					
40	2MB–E2279–00	PLATE	1					
41	90183–06811	NUT, SPRING	2					
42	90119–06226	BOLT, WITH WASHER	2					
43	90269–07803	RIVET	1					
44	90183–060A6	NUT, SPRING	1					
45	90119–06868	BOLT, WITH WASHER	1					
46	1XD–E5472–00	SEAL, AIR DUCT	1					
47	90450–94001	HOSE CLAMP ASSY	2					

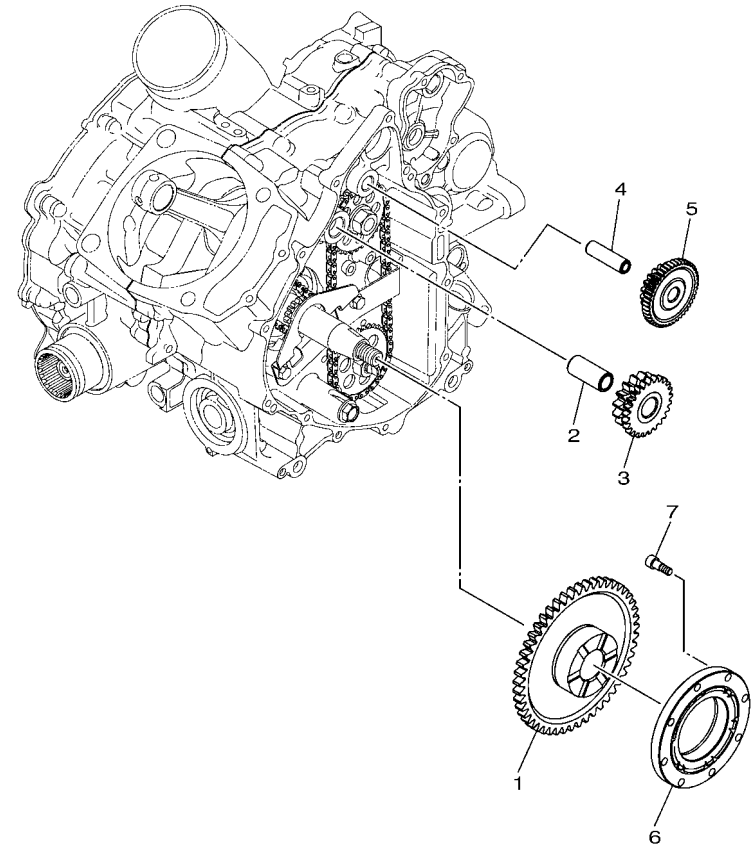

2MB1110-R150

FIG. 15 STARTER CLUTCH

REF. NO.	PART NO.	DESCRIPTION	USA					REMARKS
1	2MB–E5515–00	GEAR 3	1					
2	2MB–E5522–00	SHAFT 2	1					
3	2MB–E5517–01	GEAR, IDLER 2	1					
4	2MB–E5521–00	SHAFT 1	1					
5	2MB–E5512–00	GEAR, IDLER 1	1					
6	2MB–E5590–00	STARTER ONE-WAY ASSY	1					
7	2MB–E6777–00	BOLT	8					

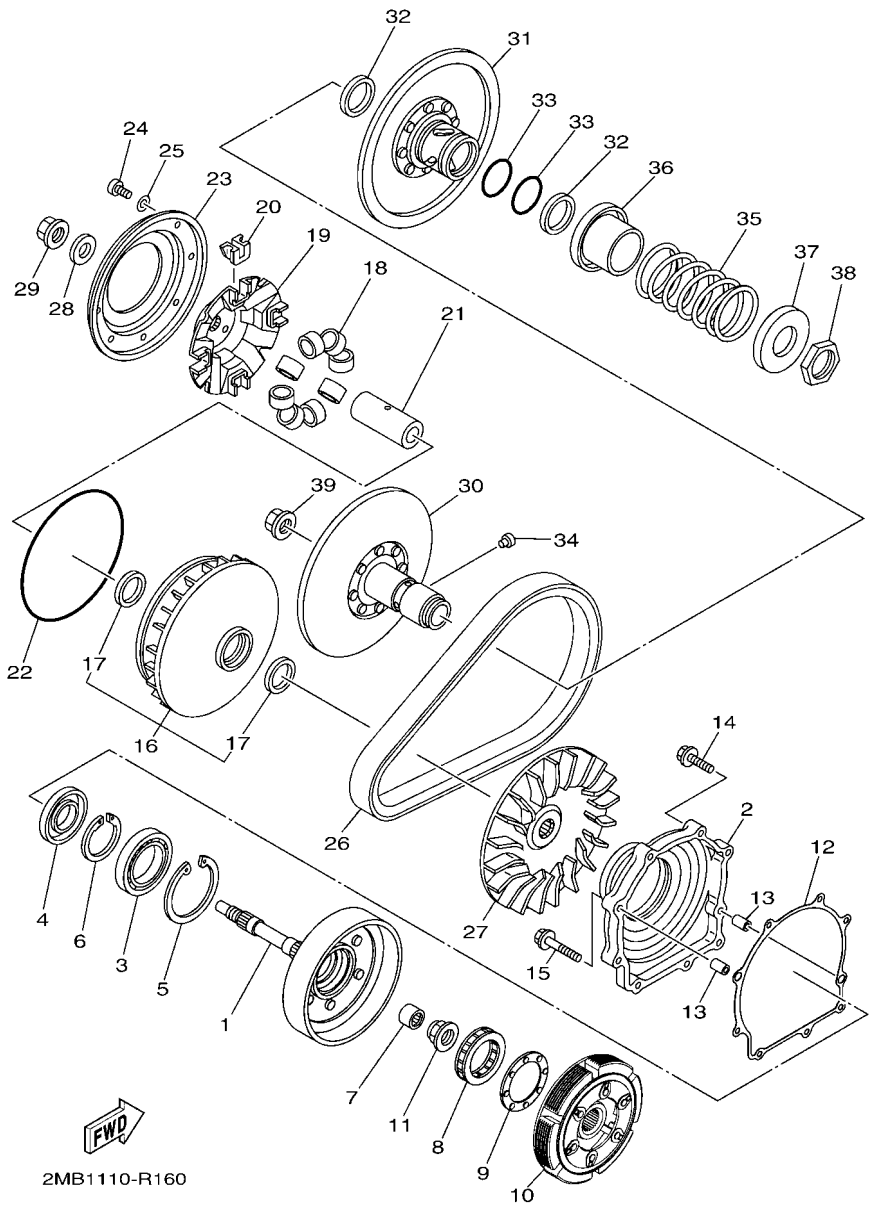

FIG. 16 CLUTCH

REF. NO.	PART NO.	DESCRIPTION	USA					REMARKS
1	2MB–E6611–00	CLUTCH HOUSING COMP.	1					
2	2MB–E5163–00	HOUSING, BEARING 1	1					
3	2MB–E6642–00	BEARING, CLUTCH AXLE	1					
4	2MB–E511B–00	OIL SEAL	1					
5	2MB–E6819–00	CIRCLIP, CLUTCH	1					
6	2MB–E5744–00	CIRCLIP	1					
7	2MB–E7678–00	BEARING	1					
8	2MB–E6664–00	BEARING, ONE WAY	1					
9	2MB–E6717–00	RING, SEAL	1					
10	2MB–E6620–00	CLUTCH CARRIER ASSY	1					
11	2MB–E6134–00	NUT, LOCK	1					
12	2MB–E5463–00	GASKET, 2	1					
13	2MB–E5181–00	PIN, DOWEL	2					
14	2MB–E5481–50	BOLT 1	7					
15	2MB–E5481–30	BOLT 1	2					
16	2MB–E7606–00	PRIMARY SLIDING SHEAVE COMP.	1					
17	2MB–F3145–00	.OIL SEAL	2					
18	2MB–E7632–00	WEIGHT	8					
19	3B4–17623–02	CAM	1					
20	2MB–E7653–00	SLIDER	4					
21	2MB–E7645–00	COLLAR	1					
22	2MB–E3473–00	O-RING	1					
23	2MB–E7639–00	STOPPER	1					
24	2MB–E1813–00	SCREW, PAN HEAD	8					
25	2MB–E1558–00	WASHER 2	8					
26	2MB–E7641–00	V-BELT	1					
27	3B4–17611–00	SHEAVE, PRIMARY FIXED	1					

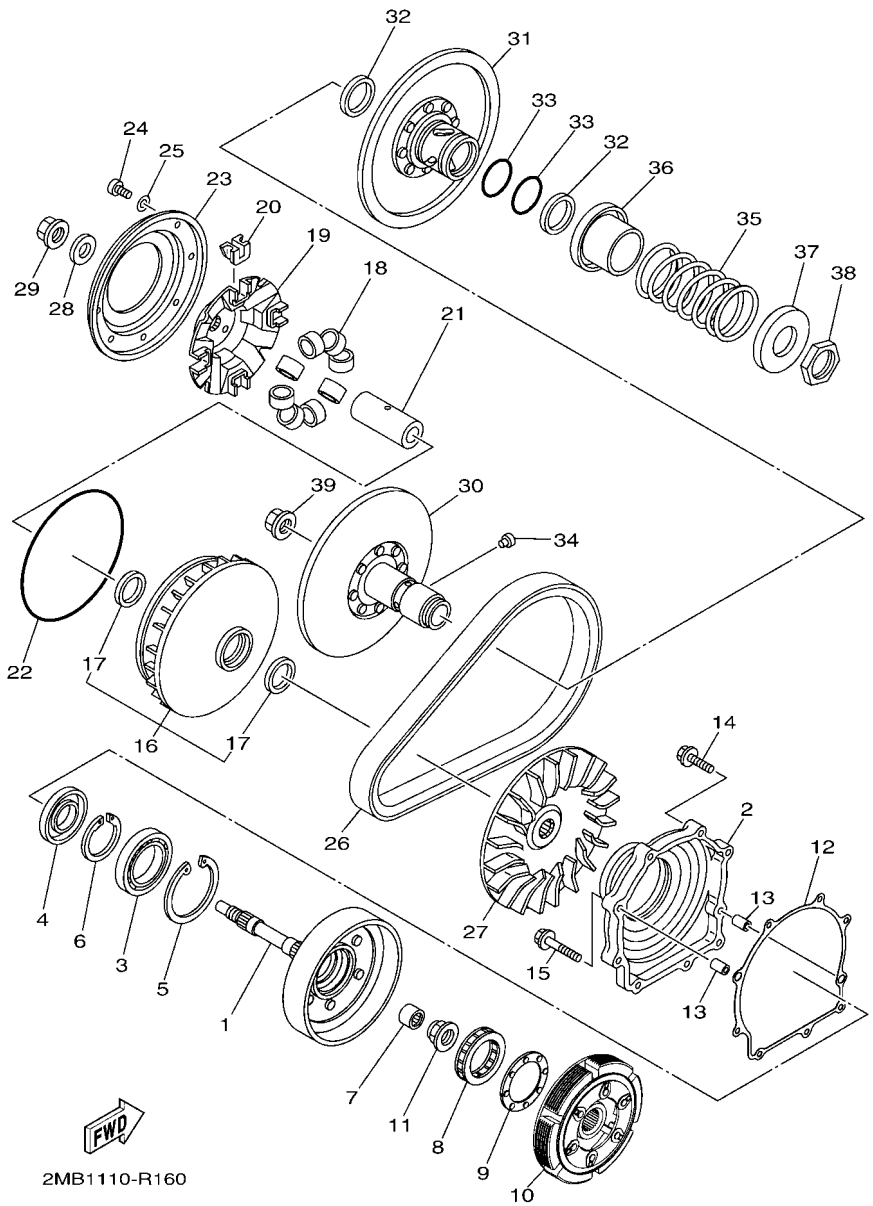

FIG. 16 CLUTCH

REF. NO.	PART NO.	DESCRIPTION	USA					REMARKS
28	2MB–E7648–00	WASHER	1					
29	2MB–E7668–00	NUT	1					
30	1XD–17660–00	SECONDARY FIXED SHEAVE COMP.	1					
31	2PG–17670–00	SECONDARY SLIDING SHEAVE	1					
32	93104–41119	OIL SEAL	2					
33	93210–44545	O-RING	2					
34	4CW–17664–00	PIN, GUIDE	4					
35	90501–650A0	SPRING, COMPRESSION	1					
36	4WV–17684–00	SEAT, SECONDARY SPRING	1					
37	4WV–17644–00	SEAT,SPRING	1					
38	90170–36279	NUT	1					
39	2MB–E7668–00	NUT	1					

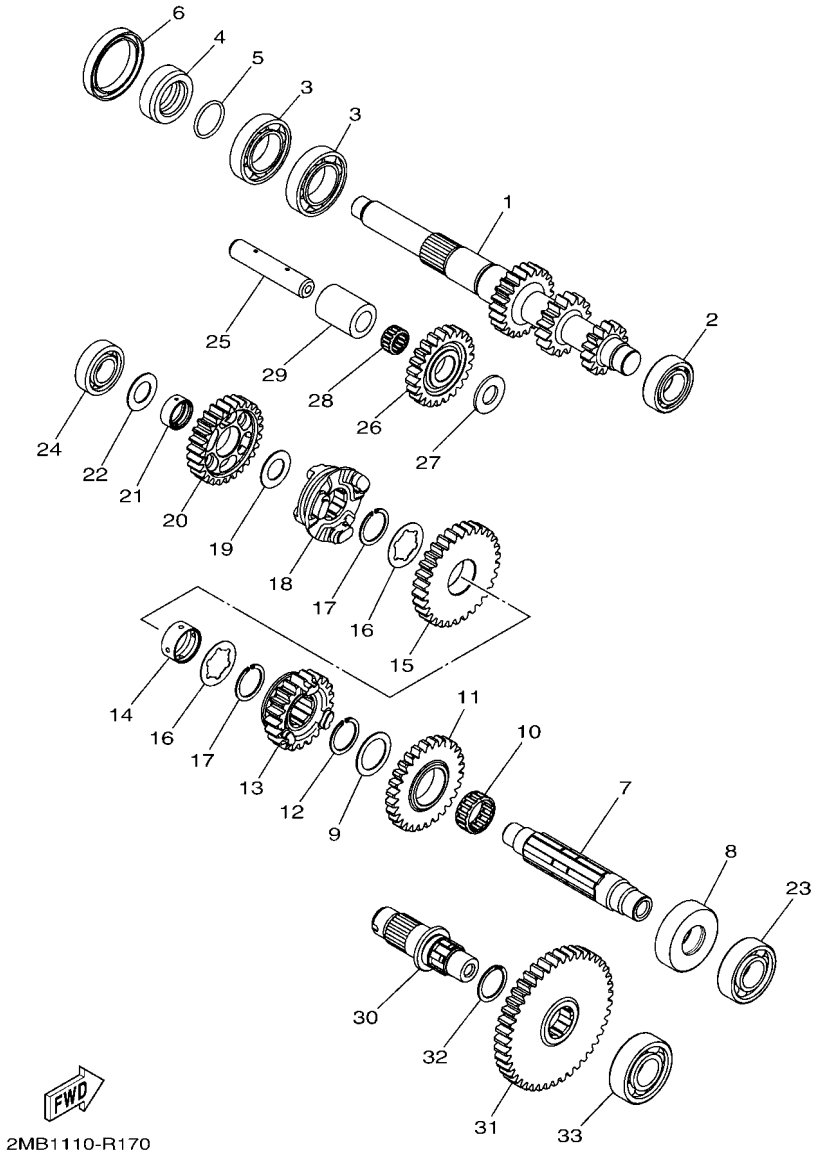

FIG. 17 TRANSMISSION

REF. NO.	PART NO.	DESCRIPTION	USA					REMARKS
1	2MB–E7681–00	SHAFT, SECONDARY	1					
2	2MB–E7156–00	BEARING 1	1					
3	2MB–E7166–00	BEARING 2	2					
4	2MB–E7158–00	COLLAR 1	1					
5	2MB–E76F5–00	O-RING	1					
6	2MB–E76F3–00	OIL SEAL	1					
7	2MB–E7421–00	AXLE, DRIVE	1					
8	2MB–E7168–00	COLLAR 2	1					
9	2MB–E7116–00	WASHER, GEAR HOLD 1	1					
10	2MB–E1428–00	BEARING 1	1					
11	2MB–E7253–00	GEAR, REVERSE WHEEL 2 (28T)	1					
12	2MB–E662A–00	CIRCLIP	1					
13	2MB–E7582–00	GEAR, MIDDLE DRIVE (21T)	1					
14	2MB–E7258–00	COLLAR 1	1					
15	2MB–E7233–00	GEAR, LOW WHEEL (31T)	1					
16	2MB–E7126–00	WASHER, GEAR HOLD 2	2					
17	2MB–E662A–00	CIRCLIP	2					
18	2MB–E7285–00	CLUTCH, DOG	1					
19	2MB–E7136–00	WASHER, GEAR HOLD 3	1					
20	2MB–E7223–00	GEAR, HIGH WHEEL (30T)	1					
21	2MB–E7268–00	COLLAR 2	1					
22	2MB–E7154–00	WASHER, GEAR HOLD	1					
23	2MB–E1429–00	BEARING 2	1					
24	2MB–E142A–00	BEARING	1					
25	2MB–E7432–00	AXLE, IDLE	1					
26	2MB–E7243–00	GEAR, REVERSE WHEEL 1 (23T)	1					
27	2MB–E7059–00	WASHER,2	1					

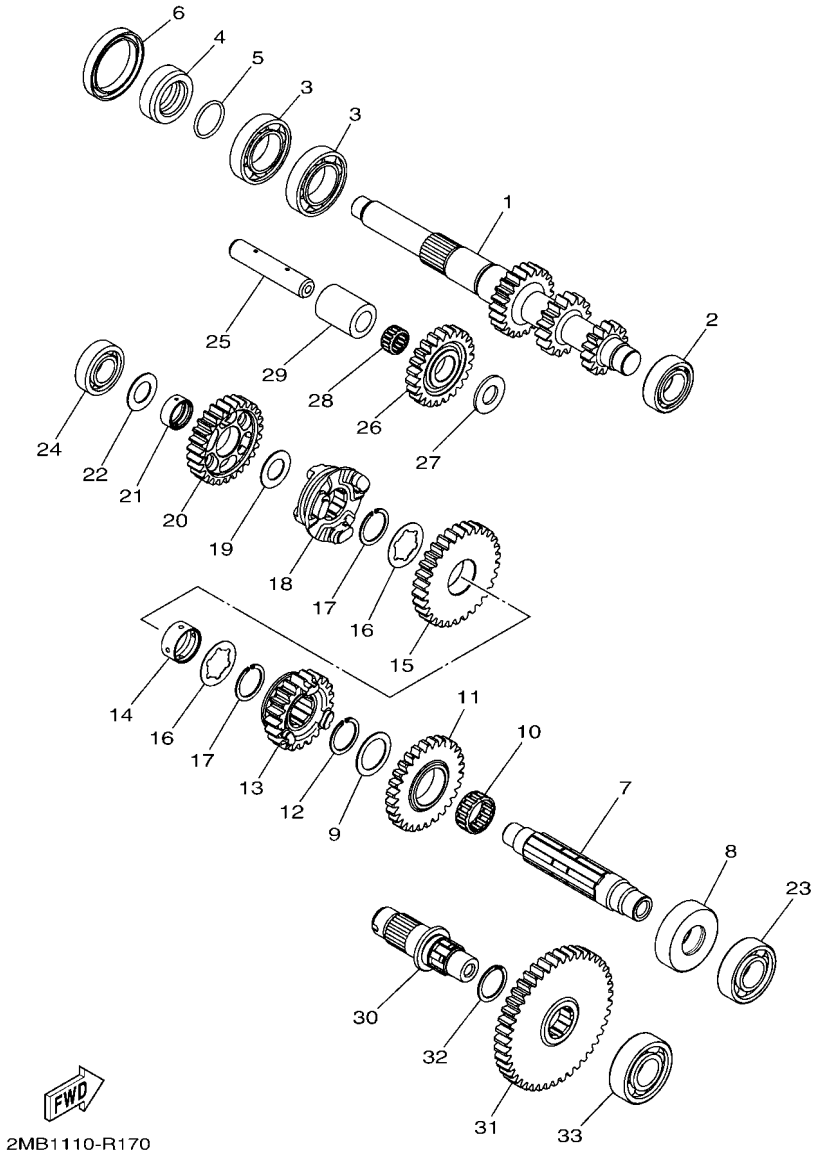

FIG. 17 TRANSMISSION

REF. NO.	PART NO.	DESCRIPTION	USA					REMARKS
28	2MB–E142B–00	BEARING 4	1					
29	2MB–E7278–00	COLLAR	1					
30	2MB–E7523–00	SHAFT	1					
31	2MB–E7583–00	GEAR, MIDDLE DRIVEN (43T)	1					
32	2MB–E662A–00	CIRCLIP	1					
33	2MB–E4814–00	BEARING	1					

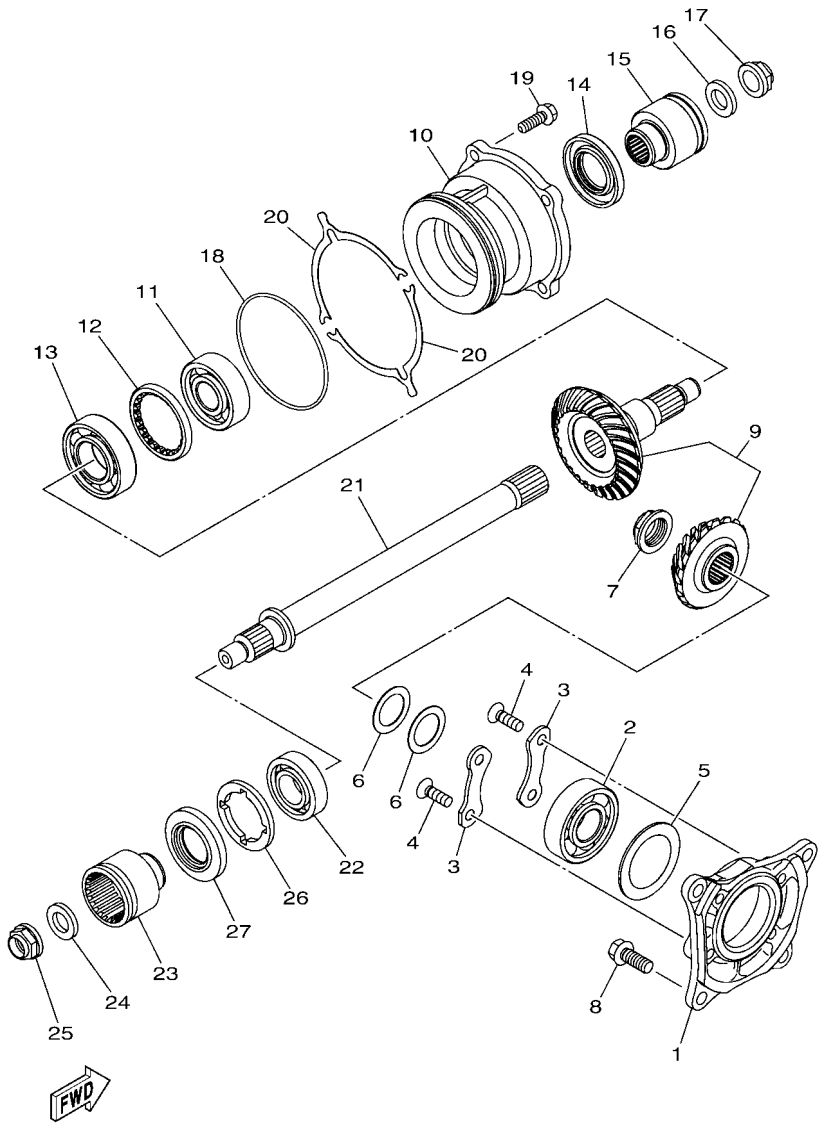

FIG. 18 MIDDLE DRIVE GEAR

REF. NO.	PART NO.	DESCRIPTION	USA					REMARKS
1	2MB–E7521–00	HOUSING, BEARING	1					
2	2MB–E7412–00	BEARING	1					
3	2MB–E5383–00	PLATE, BEARING COVER	2					
4	2MB–E765G–00	SCREW, FIXED	4					
5	2MB–E7658–00	WASHER, BELLEVILLE	1					
6	2MB–E7417–50	SHIM 1 (0.5T)	2					UR
	2MB–E7417–60	SHIM 1 (0.55T)	2					UR
	2MB–E7417–70	SHIM 1 (0.6T)	2					UR
	2MB–E7417–80	SHIM 1 (0.7T)	2					UR
	2MB–E7417–90	SHIM 1 (0.8T)	2					UR
	2MB–E7417–A0	SHIM 1 (0.9T)	2					UR
	2MB–E7417–B0	SHIM 1 (1.0T)	2					UR
7	2MB–E7463–00	NUT, LOCK	1					
8	2MB–E22A1–00	BOLT 2	4					
9	2MB–17530–00	PINION SET	1					
10	2MB–E7551–00	HOUSING, BEARING	1					
11	2MB–E7413–00	BEARING 2	1					
12	2MB–E7589–00	NUT	1					
13	2MB–E7422–00	BEARING 1	1					
14	2MB–E7499–00	OIL SEAL	1					
15	2MB–E7832–00	COUPLING	1					
16	2MB–E7058–00	WASHER,1	1					
17	2MB–E6647–00	NUT	1					
18	2MB–E76F4–00	O-RING	1					
19	2MB–E2615–00	BOLT	4					
20	2MB–E7531–00	SHIM, PINION (0.1T)	2					UR
	2MB–E7531–10	SHIM, PINION (0.15T)	2					UR

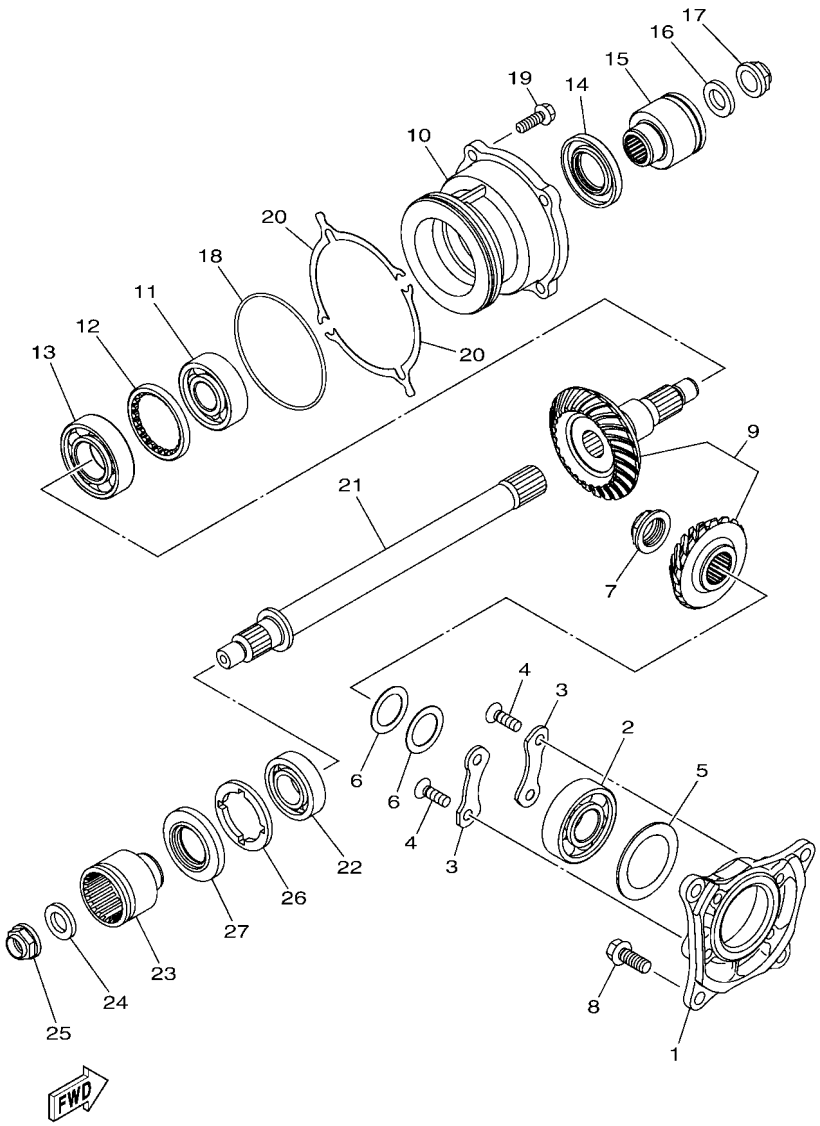

2MB1110-R180

FIG. 18 MIDDLE DRIVE GEAR

REF. NO.	PART NO.	DESCRIPTION	USA					REMARKS
20	2MB–E7531–20	SHIM, PINION (0.2T)	2					UR
	2MB–E7531–30	SHIM, PINION (0.3T)	2					UR
	2MB–E7531–40	SHIM, PINION (0.4T)	2					UR
	2MB–E7531–50	SHIM, PINION (0.5T)	2					UR
	2MB–E7531–60	SHIM, PINION (0.6T)	2					UR
21	2MB–E761A–00	SHAFT 1	1					
22	2MB–E7423–00	BEARING 2	1					
23	2MB–E7832–00	COUPLING	1					
24	2MB–E7058–00	WASHER,1	1					
25	2MB–E6647–00	NUT	1					
26	2MB–E7642–00	NUT, BEARING	1					
27	2MB–E7499–00	OIL SEAL	1					

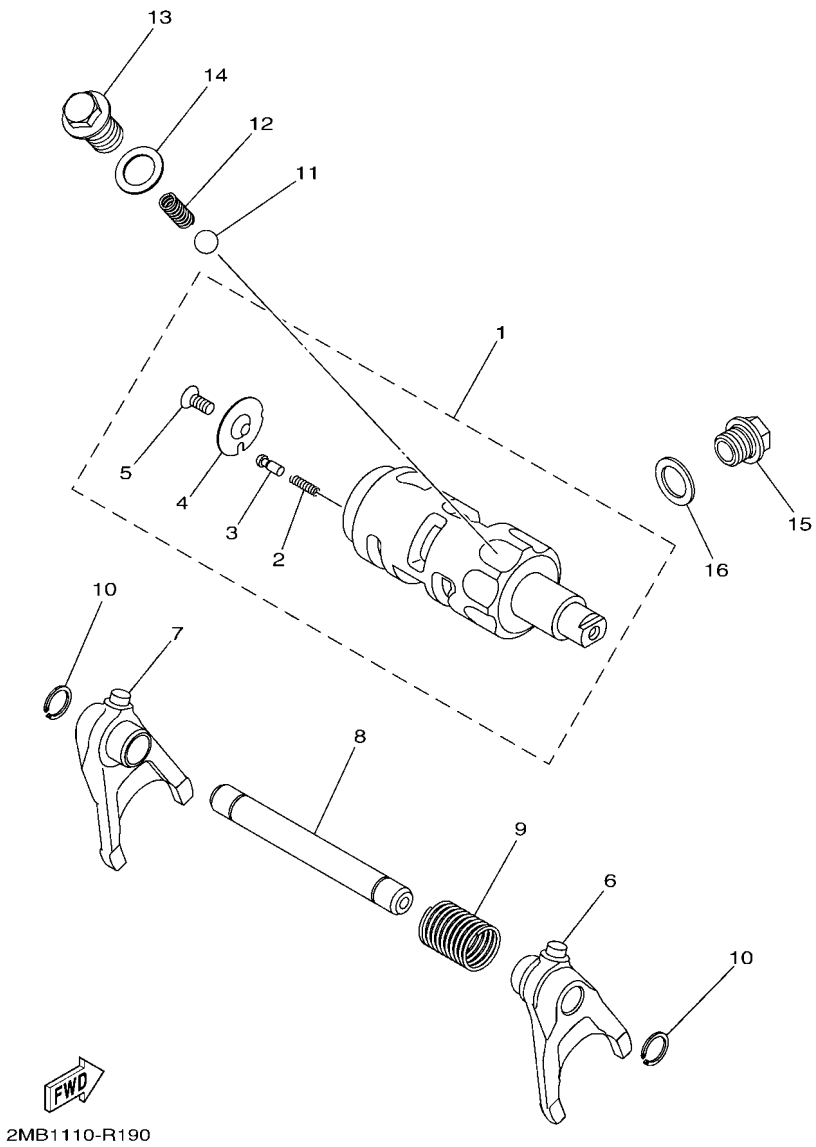

FIG. 19 SHIFT CAM & FORK

REF. NO.	PART NO.	DESCRIPTION	USA					REMARKS
1	2MB–E8540–00	SHIFT CAM ASSY	1					
2	2MB–E8222–00	.SPRING 2	1					
3	2MB–E8542–00	.POINT, NEUTRAL	1					
4	2MB–E8566–00	.PLATE, SIDE 2	1					
5	2MB–E8563–00	.SCREW, STOPPER PLATE	1					
6	2MB–E8511–00	FORK, SHIFT 1	1					
7	2MB–E8512–00	FORK, SHIFT 2	1					
8	2MB–E8531–00	BAR, SHIFT FORK GUIDE 1	1					
9	2MB–E8123–00	SPRING	1					
10	2MB–E5597–00	CIRCLIP 2	2					
11	2MB–E8218–00	BALL	1					
12	2MB–E8143–00	SPRING	1					
13	2MB–E8119–00	BOLT, SHIFT	1					
14	2MB–E8363–00	GASKET	1					
15	2MB–E8149–00	PLUG, BLIND	1					
16	2MB–E1198–00	GASKET	1					

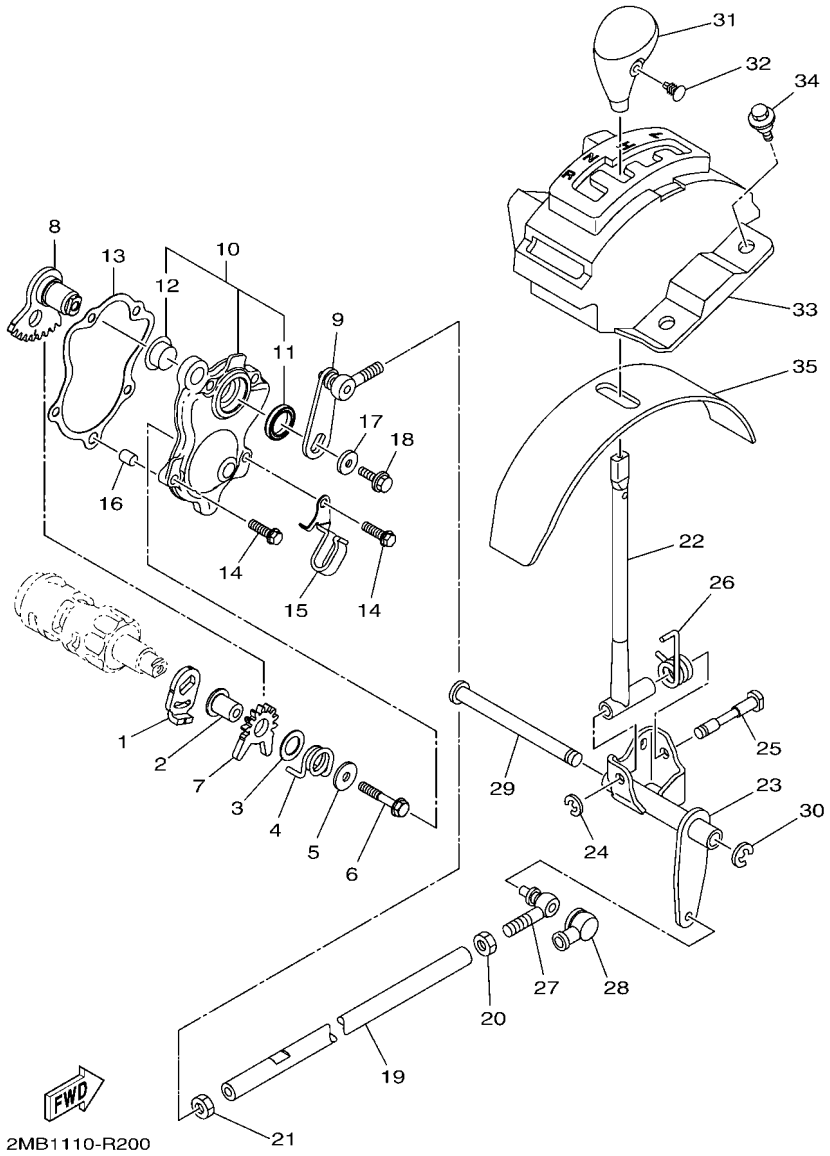

FIG. 20 SHIFT SHAFT

REF. NO.	PART NO.	DESCRIPTION	USA					REMARKS
1	2MB–E8198–00	LEVER	1					
2	2MB–E8413–00	COLLAR, SHIFTER	1					
3	2MB–E8137–00	WASHER 1	1					
4	2MB–E8183–00	SPRING	1					
5	2MB–E8138–00	WASHER 2	1					
6	2MB–E5482–20	BOLT 2	1					
7	2MB–E8191–00	LEVER	1					
8	2MB–E8103–00	SHIFT SHAFT COMP.	1					
9	2MB–18104–00	SHIFT GUIDE COMP.	1					
10	2MB–E8380–00	SHIFTER BRKT. ASSY	1					
11	2MB–E76G3–00	.OIL SEAL 2	1					
12	2MB–E8582–00	.SPACER 2	1					
13	2MB–E8146–00	GASKET	1					
14	2MB–E5481–10	BOLT 1	4					
15	2MB–E261G–00	CLAMP 2	1					
16	2MB–E8438–00	PIN, DOWEL	1					
17	90201–06036	WASHER, PLATE	1					
18	90105–06176	BOLT, FLANGE	1					
19	2MB–18115–00	ROD, SHIFT	1					
20	90170–08358	NUT	1					
21	95302–08700	NUT, HEXAGON	1					
22	1XD–E8190–10	LEVER COMP. 1	1					
23	2MB–E8169–00	ARM, SHIFT 2	1					
24	99002–06600	CIRCLIP	1					
25	1HP–E8125–00	SHAFT, SHIFT	1					
26	1HP–E8196–00	SPRING, RETURN	1					
27	1KT–18157–00	JOINT 2	1					

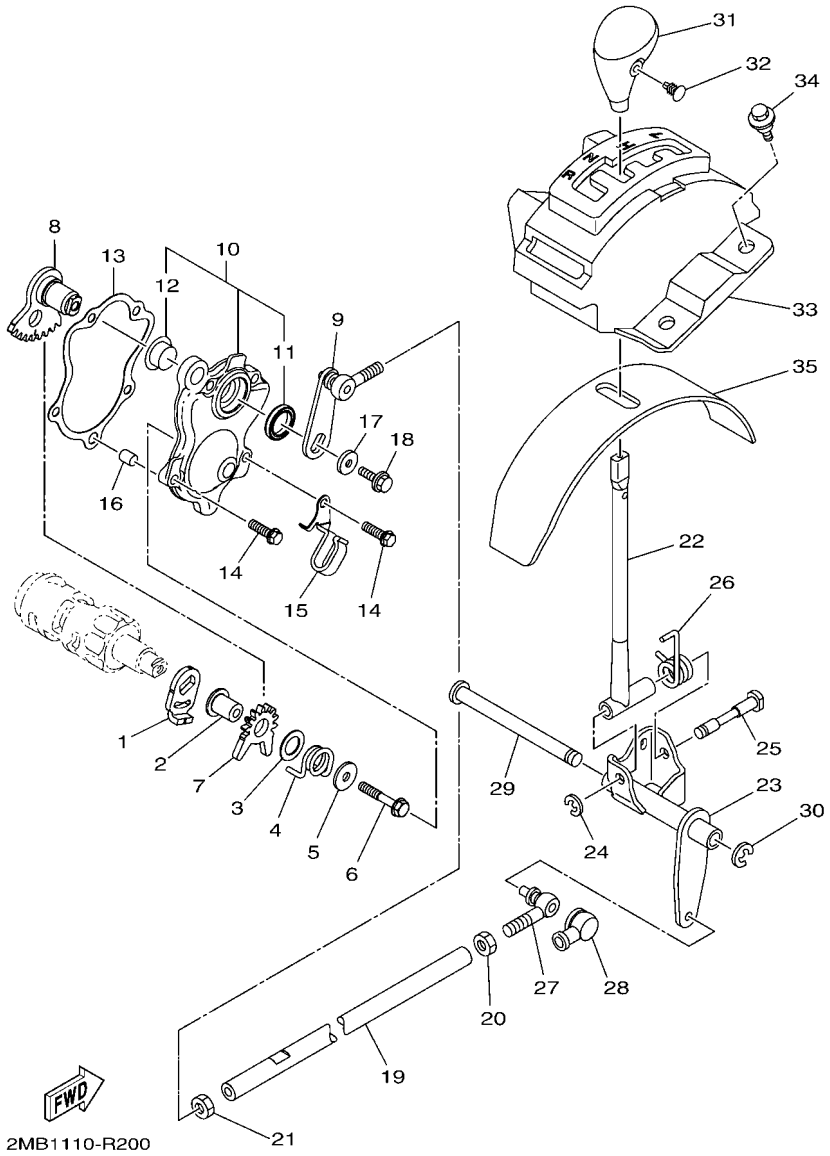

FIG. 20 SHIFT SHAFT

REF. NO.	PART NO.	DESCRIPTION	USA					REMARKS
28	2H9–18154–00	COVER, DUST	1					
29	2MB–18173–00	PIN, SHIFT	1					
30	99001–08600	CIRCLIP	1					
31	28P–18174–00	KNOB, SHIFT LEVER	1					
32	90269–05055	RIVET	1					
33	1XD–E8172–00	GUIDE, SHIFT	1					
34	90109–06172	BOLT	3					
35	1HP–E8154–00	COVER, DUST	1					

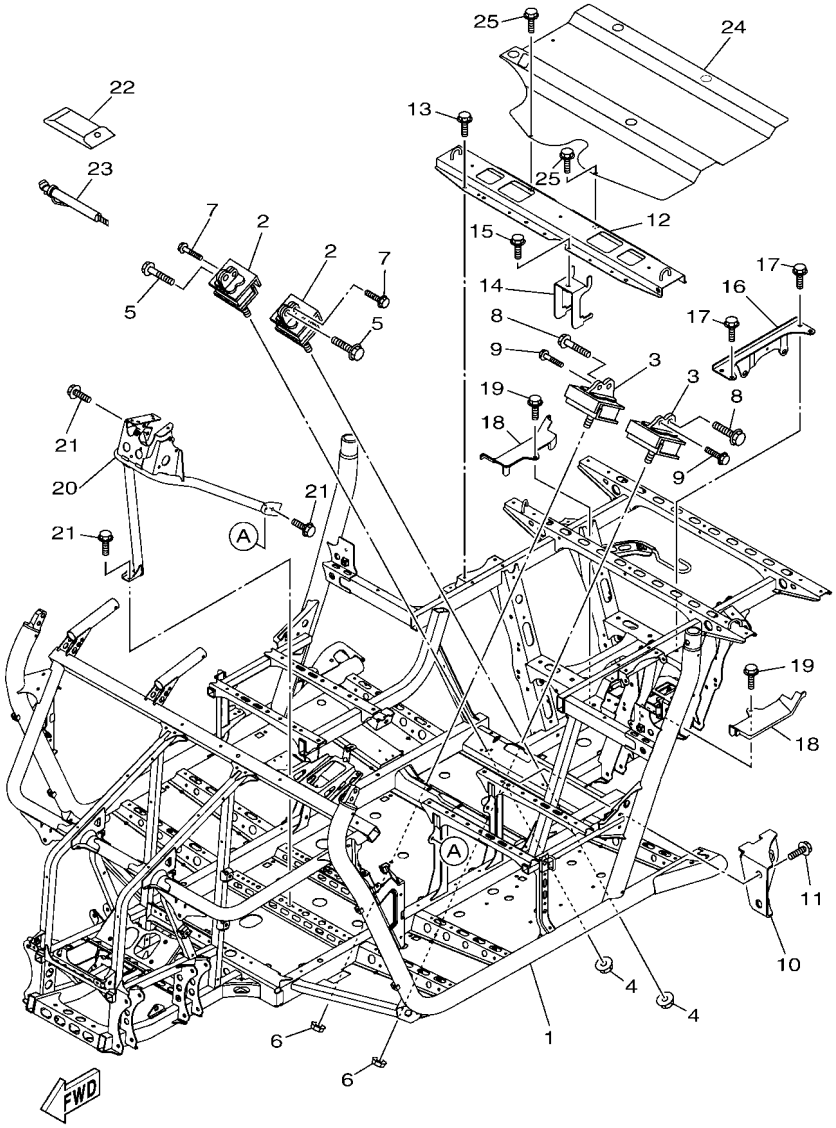

2MB1110-R210

FIG. 21 FRAME

REF. NO.	PART NO.	DESCRIPTION	USA					REMARKS
1	2MB–F1110–00	FRAME COMP.	1					
2	2MB–F1485–00	DAMPER, RUBBER 1	2					
3	2PG–21485–00	DAMPER, RUBBER 1	2					
4	90185–10011	NUT, SELF-LOCKING	2					
5	2MB–E3574–00	BOLT 2	2					
6	90185–10011	NUT, SELF-LOCKING	2					
7	2MB–E5481–A0	BOLT 1	2					
8	90105–10314	BOLT, FLANGE	2					
9	90105–06639	BOLT, FLANGE	2					
10	2MB–F287G–00	BRACKET, LOCK	1					
11	95812–10020	BOLT, FLANGE	2					
12	2MB–F117A–00	STAY	1					
13	95812–08016	BOLT, FLANGE	4					
14	2MB–F1159–00	BRACKET	1					
15	95812–06010	BOLT, FLANGE	1					
16	2MB–F831T–00	STAY, SUPPORT 1	1					
17	95812–08016	BOLT, FLANGE	4					
18	2MB–F198J–00	COVER 3	2					
19	90119–06868	BOLT, WITH WASHER	2					
20	2MB–F1986–00	REINFORCEMENT, FRAME 1	1					
21	90105–08867	BOLT, FLANGE	3					
22	5B4–F8100–00	TOOL KIT	1					
23	1XD–F811A–00	GAUGE, AIR	1					
24	2MB–F2898–00	INSULATOR, HEAT	1					
25	95812–08016	BOLT, FLANGE	2					

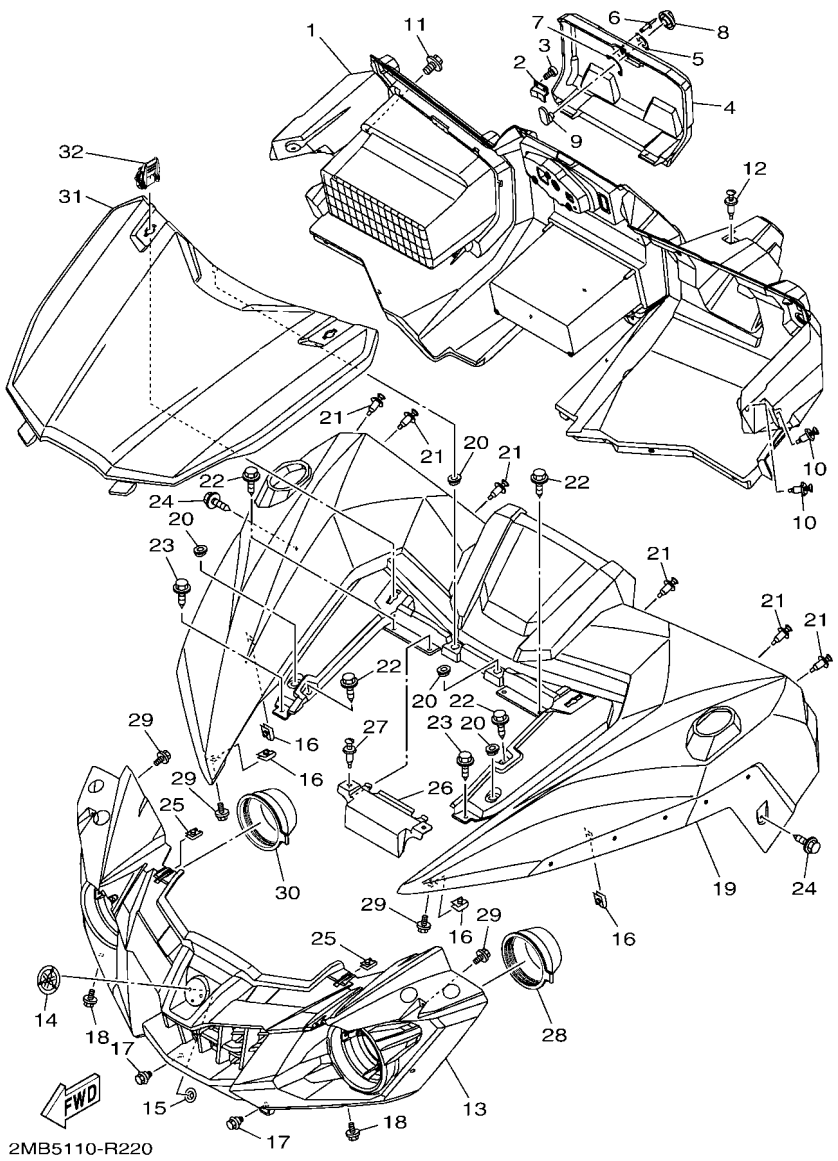

FIG. 22 FRONT FENDER

REF. NO.	PART NO.	DESCRIPTION	USA					REMARKS
1	2MB–K7711–01	PANEL, INSTRUMENT	1					
2	1XD–F139T–00	BRACKET, COVER	1					
3	90164–04800	SCREW, TAPPING	2					
4	1XD–F160F–00	LID	1					
5	1XD–F1515–00	WASHER, SPECIAL	1					
6	90267–24143	RIVET, BLIND	2					
7	1XD–F1516–00	WASHER, SPECIAL 2	1					
8	1XD–2837G–00	LOCK 1	1					
9	1XD–2837H–00	LOCK 2	1					
10	90269–07803	RIVET	4					
11	90119–06226	BOLT, WITH WASHER	1					
12	90269–07803	RIVET	1					
13	2MB–F8309–00	GRILLE, FRONT	1					
14	1XD–F175B–01	TUNING FORK MARK	1					
15	90183–06071	NUT, SPRING	2					
16	90183–060A6	NUT, SPRING	6					
17	90109–06202	BOLT	2					
18	90119–06226	BOLT, WITH WASHER	2					
19	2MB–F1510–00	FRONT FENDER COMP.	1					
20	90480–01558	GROMMET	4					
21	90269–07803	RIVET	6					
22	90119–06226	BOLT, WITH WASHER	4					
23	90119–06226	BOLT, WITH WASHER	2					
24	90119–06226	BOLT, WITH WASHER	2					
25	90183–060A6	NUT, SPRING	2					
26	1XD–F163A–00	COVER, REAR FENDER 1	1					
27	90269–07803	RIVET	2					

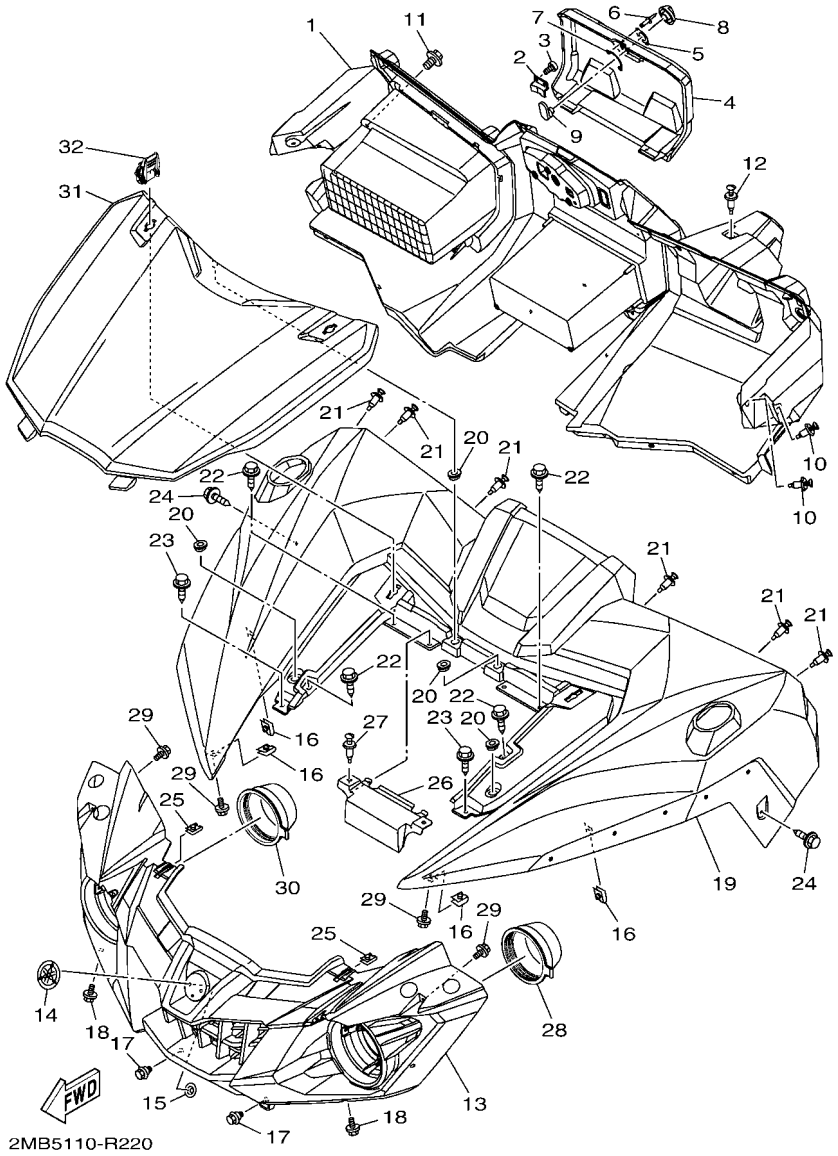

FIG. 22 FRONT FENDER

REF. NO.	PART NO.	DESCRIPTION	USA					REMARKS
28	3B4–28349–00	CAP	1					
29	90119–06018	BOLT, WITH WASHER	4					
30	3B4–28349–00	CAP	1					
31	2MB–F197A–00	HOOD ASSY 3	1					
32	1XD–2175K–10	LEVER, LOCK	2					

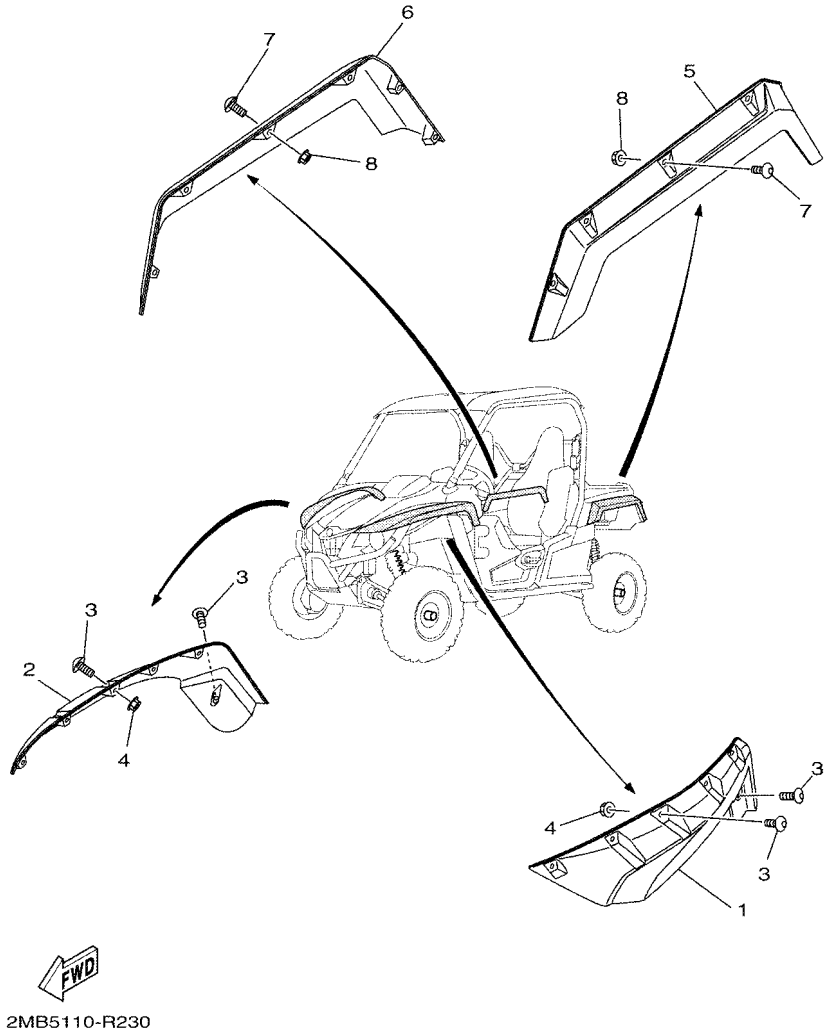

FIG. 23 FENDER

REF. NO.	PART NO.	DESCRIPTION	USA					REMARKS
1	2MB–F1551–00	FENDER, OVER	1					
2	2MB–F1555–00	FENDER, OVER 2	1					
3	90149–06302	SCREW	12					
4	95602–06200	NUT, SELF-LOCKING	10					
5	2MB–F1559–00	FENDER, OVER 3	1					
6	2MB–F1560–00	FENDER, OVER 4	1					
7	90149–06302	SCREW	12					
8	95602–06200	NUT, SELF-LOCKING	12					

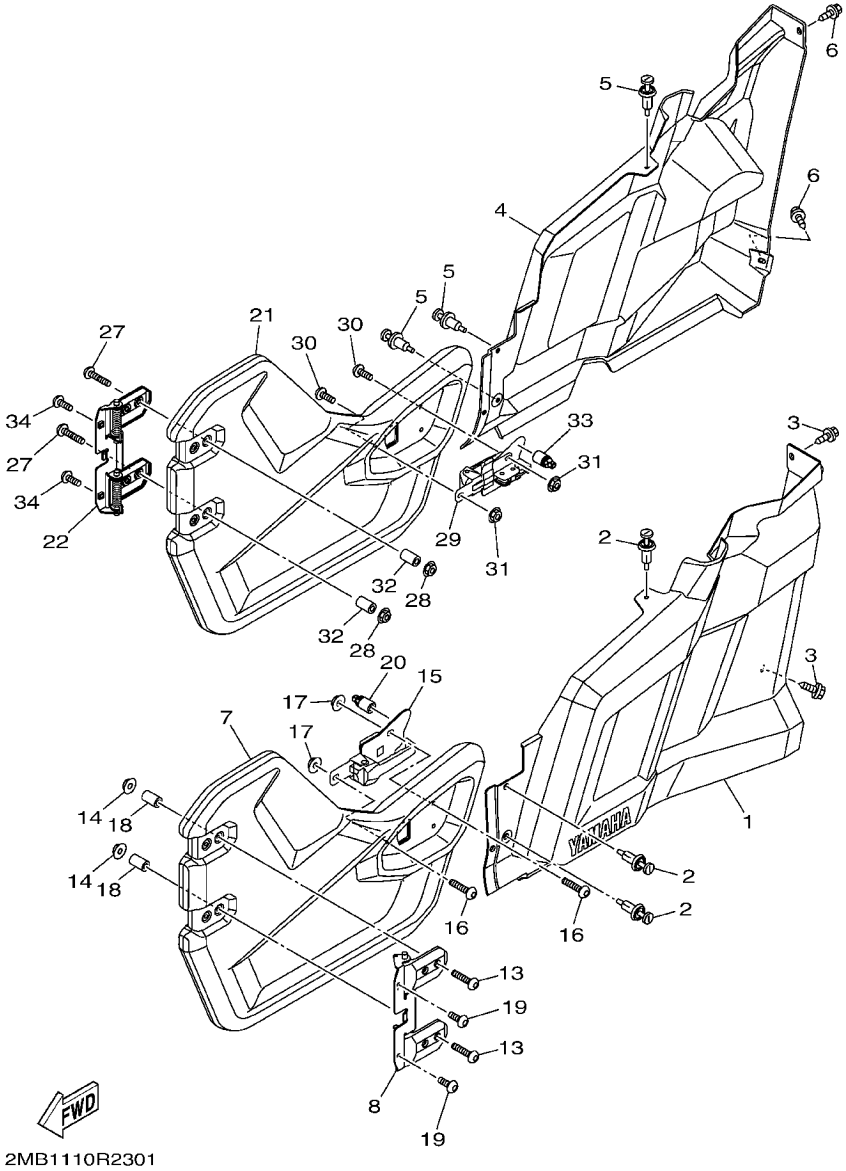

FIG. 24 SIDE COVER

REF. NO.	PART NO.	DESCRIPTION	USA					REMARKS
1	2MB–F1721–00	COVER, SIDE 2	1					
2	90269–07803	RIVET	3					
3	90119–06226	BOLT, WITH WASHER	2					
4	2MB–F1731–00	COVER, SIDE 3	1					
5	90269–07803	RIVET	3					
6	90119–06226	BOLT, WITH WASHER	2					
7	1XD–K8557–10	PNL., DOOR FR. LH	1					
8	1XD–F4772–00	HINGE ASSY	1					
13	90109–06897	BOLT	4					
14	95602–06200	NUT, SELF-LOCKING	4					
15	2MB–K7171–00	BODY, LATCH 1	1					
16	90111–06086	BOLT,HEX. SOCKET BUTTON	3					
17	95602–06200	NUT, SELF-LOCKING	3					
18	90387–06304	COLLAR	4					
19	5B4–F1722–00	BOLT 2	2					
20	2MB–F8378–00	PAD	1					
21	1XD–K8557–10	PNL., DOOR FR. LH	1					
22	1XD–F4772–00	HINGE ASSY	1					
27	90109–06897	BOLT	4					

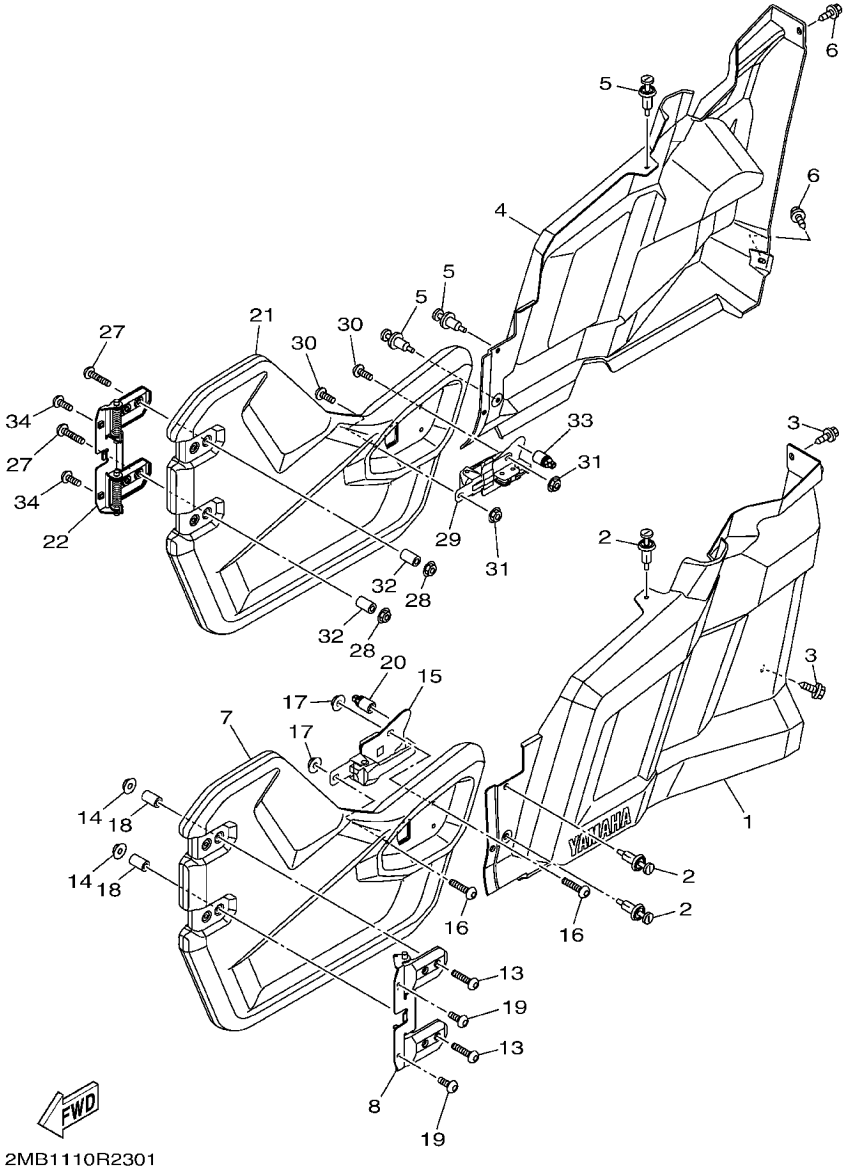

FIG. 24 SIDE COVER

REF. NO.	PART NO.	DESCRIPTION	USA					REMARKS
28	95602–06200	NUT, SELF-LOCKING	4					
29	2MB–K7172–00	BODY, LATCH 2	1					
30	90111–06086	BOLT,HEX. SOCKET BUTTON	3					
31	95602–06200	NUT, SELF-LOCKING	3					
32	90387–06304	COLLAR	4					
33	2MB–F8378–00	PAD	1					
34	5B4–F1722–00	BOLT 2	2					

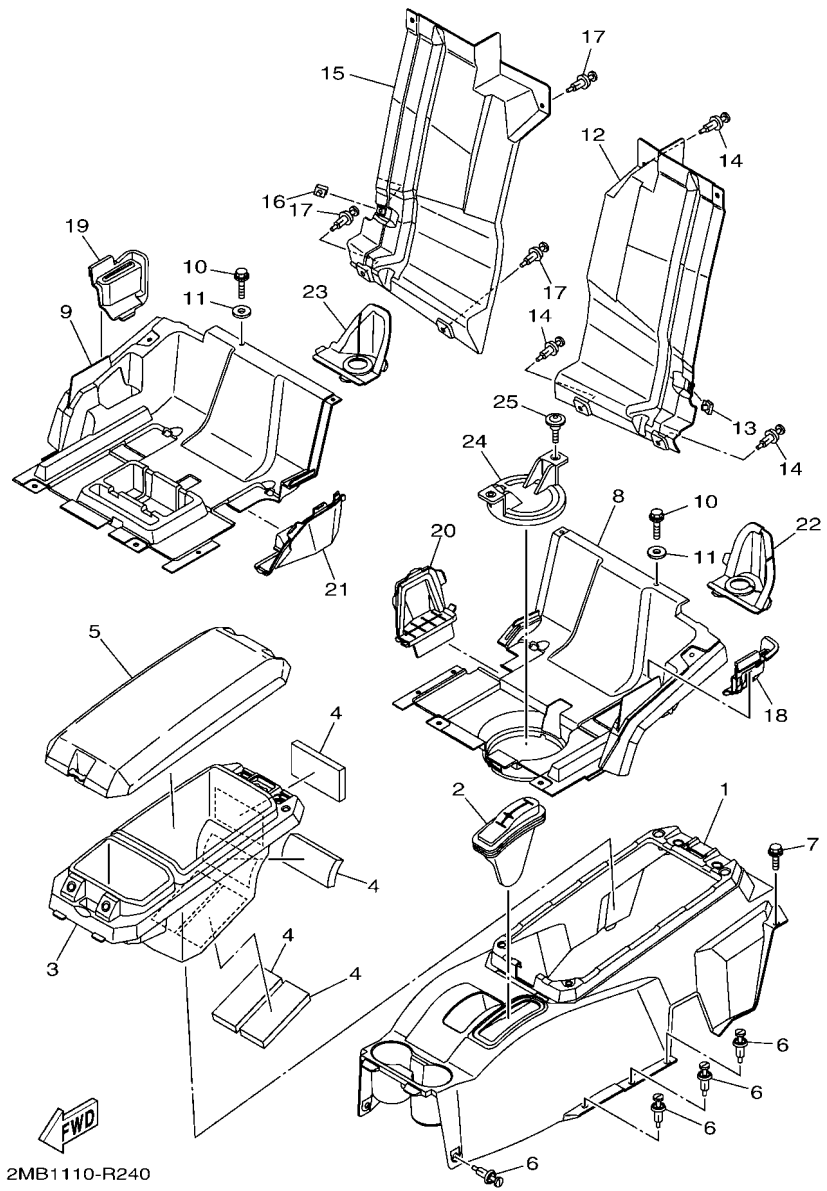

FIG. 25 SIDE COVER 2

REF. NO.	PART NO.	DESCRIPTION	USA					REMARKS
1	2MB–F8219–00	COVER 1	1					
2	1XD–F6372–00	COVER, HANDLE LEVER 1	1					
3	2MB–F1653–00	BOX	1					
4	JR4–7825N–00	PAD, SILENCER 19	4					
5	2MB–F177J–00	LID 2	1					
6	90269–07803	RIVET	8					
7	90119–06226	BOLT, WITH WASHER	2					
8	2MB–F84A3–00	PLATE, UNDER 1	1					
9	2MB–F84A4–00	PLATE, UNDER 2	1					
10	90105–06833	BOLT, FLANGE	2					
11	90201–06036	WASHER, PLATE	2					
12	2MB–F2327–00	MUD GUARD 1	1					
13	90183–060A6	NUT, SPRING	1					
14	90269–07803	RIVET	3					
15	2MB–F2328–00	MUD GUARD 2	1					
16	90183–060A6	NUT, SPRING	1					
17	90269–07803	RIVET	3					
18	2MB–F8483–00	PLATE, RUBBER 1	1					
19	2MB–F8484–00	PLATE, RUBBER 2	1					
20	2MB–F8485–00	PLATE, RUBBER 3	1					
21	2MB–F8499–00	PLATE, RUBBER 4	1					
22	2MB–F845J–00	PLATE, RUBBER 5	1					
23	2MB–F846J–00	PLATE, RUBBER 6	1					
24	2MB–F847J–00	PLATE, RUBBER 7	1					
25	90109–068A5	BOLT	2					

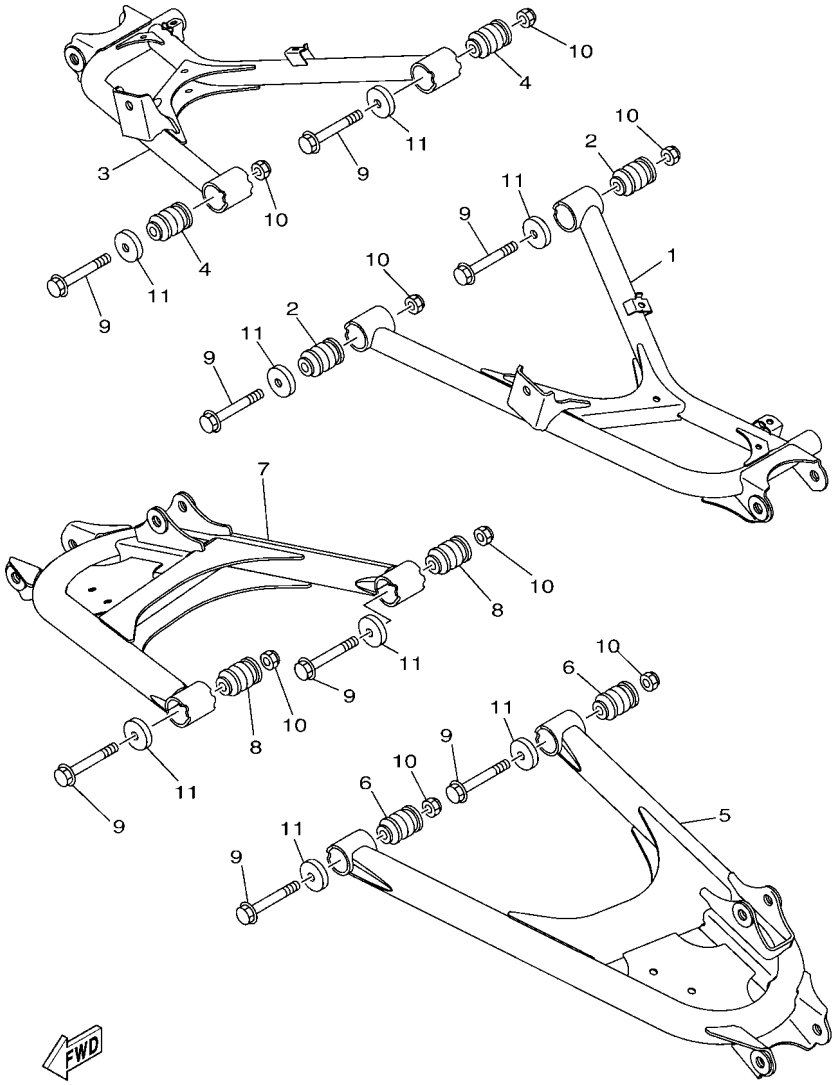

FIG. 26 REAR ARM

REF. NO.	PART NO.	DESCRIPTION	USA					REMARKS
1	2MB–F2171–00	ARM, REAR 1	1					
2	1HP–F3526–00	BUSH	2					
3	2MB–F2172–00	ARM, REAR 2	1					
4	1HP–F3526–00	BUSH	2					
5	2MB–F217M–00	ARM 1	1					
6	1HP–F3526–00	BUSH	2					
7	2MB–F217N–00	ARM 2	1					
8	1HP–F3526–00	BUSH	2					
9	90105–10267	BOLT, FLANGE	8					
10	90185–10012	NUT, SELF-LOCKING	8					
11	5KM–22149–10	WASHER	8					

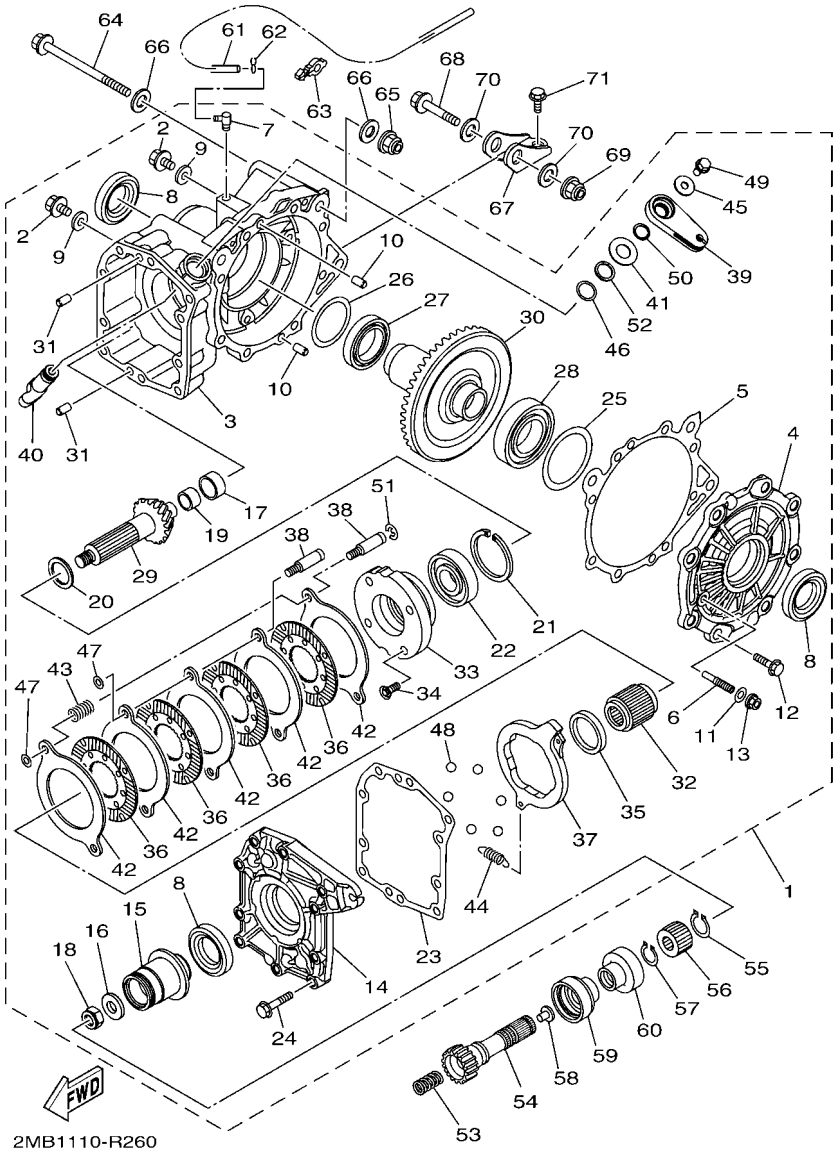

FIG. 27 DRIVE SHAFT

REF. NO.	PART NO.	DESCRIPTION	USA					REMARKS
1	2MB–G6101–01	REAR AXLE GEAR CASE ASSY	1					
2	1XD–E2228–00	.BOLT	2					
3	2MB–G6151–00	.HOUSING, DRIVE SHAFT	1					
4	1XD–G6152–00	.HOUSING, BEARING	1					
5	1XD–G631A–00	.GSKT., CASE	1					
6	1CT–G6156–00	.STOPPER, RING GEAR	1					
7	1CT–E5371–00	.BREATHER	1					
8	1XD–E511B–00	.OIL SEAL	3					
9	1CT–E1195–00	.GASKET	2					
10	1CT–E3362–00	.PIN, DOWEL 1	2					
11	1CT–G6819–00	.GASKET	1					
12	1XD–E2157–10	.BOLT	8					
13	1CT–E3275–00	.NUT, ADJUSTING	1					
14	2MB–G2134–00	.COVER	1					
15	2MB–F1753–00	.BOSS, CONNECTOR	1					
16	1CT–E1557–00	.WASHER 1	1					
17	1XD–E1428–00	.BEARING 1	1					
18	1CT–E6377–00	.NUT, LOCK	1					
19	1XD–G5319–00	.CLIP	1					
20	1XD–G7531–00	.WHEEL, SPROCKET 1	1					
21	1XD–E1486–00	.CLIP	1					
22	93306–30574	.BEARING	1					
23	2MB–G631E–00	.GASKET, COVER	1					
24	2MB–E2157–00	.BOLT	10					
25	1XD–G5567–00	.SHIM	1					
26	1XD–G5577–00	.SHIM	1					
27	1XD–E7051–00	.BEARING	1					

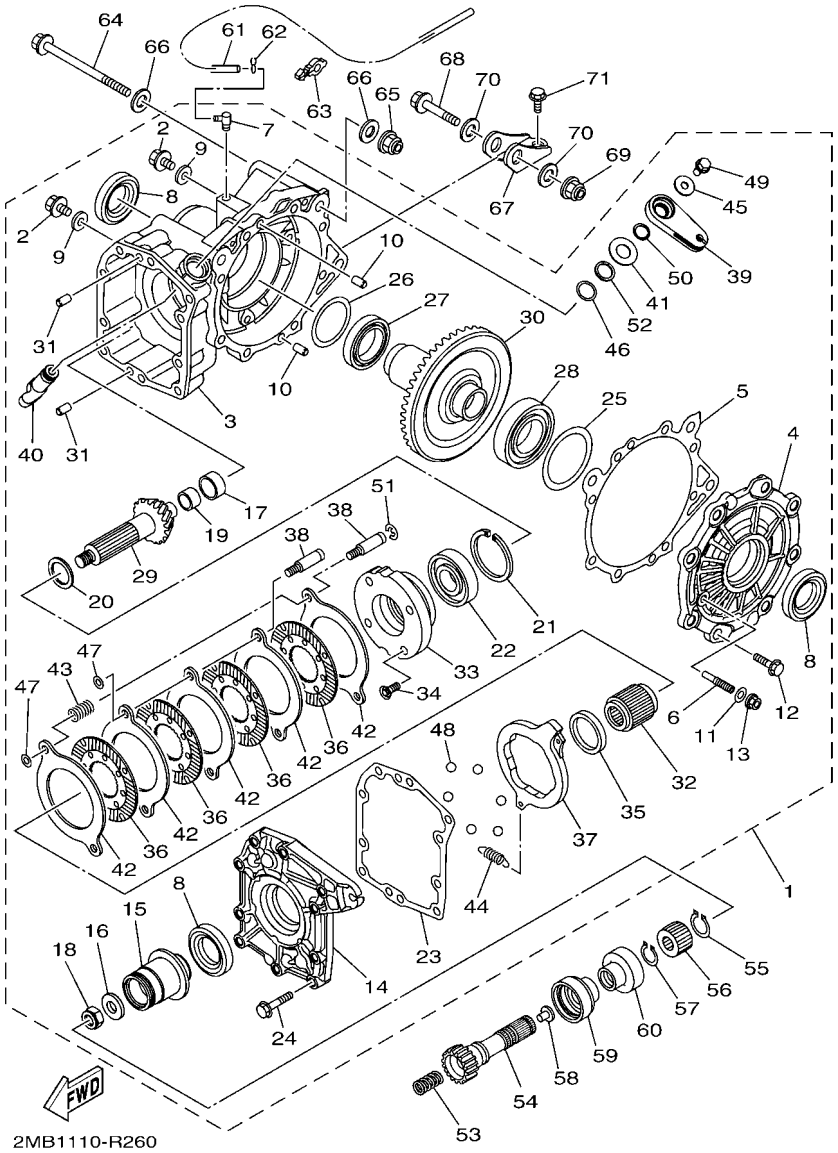

FIG. 27 DRIVE SHAFT

REF. NO.	PART NO.	DESCRIPTION	USA					REMARKS
28	1XD–E1429–00	.BEARING 2	1					
29	2MB–G6121–00	.GEAR, DRIVE PINION	1					
30	2MB–G6110–00	.RING GEAR COMP.	1					
31	1CT–E3362–00	.PIN, DOWEL 1	2					
32	2MB–G6126–00	.COUPLING	1					
33	2MB–F3872–00	.HOLDER, BEARING	1					
34	2MB–E1982–00	.BOLT, HOLDER	4					
35	2MB–F1428–00	.BEARING	1					
36	2MB–F5345–00	.INSERT, PLATE	4					
37	2MB–F5689–00	.PLATE, GUIDE	1					
38	2MB–G2478–00	.BOLT, LOCK PLATE	4					
39	2MB–F5355–00	.LEVER, CAMSHAFT	1					
40	2MB–F5351–00	.CAMSHAFT	1					
41	1CT–E2289–10	.WASHER	1					
42	1CT–F539F–00	.PLATE 1	5					
43	1CT–G6277–00	.SPRING, RETURN	2					
44	2MB–F476L–00	.SPRING	1					
45	1CT–G1298–00	.WASHER 2	1					
46	1CT–E4005–10	.RING, SEAL	1					
47	1CT–G1297–00	.WASHER, 1	4					
48	1CT–E7051–00	.BALL	6					
49	1CT–E22A1–00	.BOLT 2	1					
50	1CT–E1486–00	.CLIP	1					
51	1CT–G5319–00	.CLIP	2					
52	1CT–E3147–00	.SHIM	1					
53	90501–20361	SPRING, COMPRESSION	1					
54	2MB–G6172–00	SHAFT, DRIVE	1					

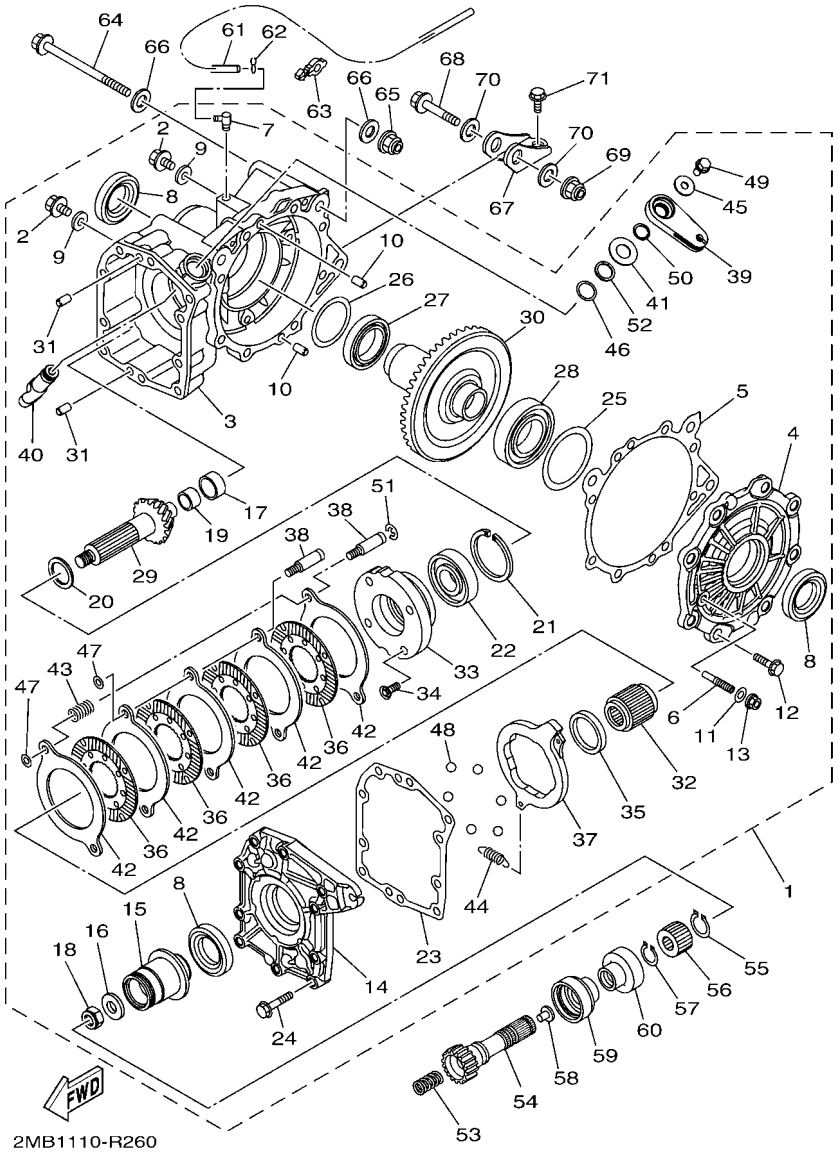

FIG. 27 DRIVE SHAFT

REF. NO.	PART NO.	DESCRIPTION	USA					REMARKS
55	99009–19400	CIRCLIP	1					
56	5KM–46126–00	COUPLING	1					
57	93410–22039	CIRCLIP	1					
58	5KM–46559–00	DAMPER	1					
59	5KM–46137–00	SEAL 2	1					
60	5KM–46136–00	SEAL 1	1					
61	90445–072J4	HOSE (L1120)	1					
62	90467–07029	CLIP	1					
63	90464–10833	CLAMP	4					
64	95812–12130	BOLT, FLANGE	2					
65	90185–12002	NUT, SELF-LOCKING	2					
66	92902–12200	WASHER	4					
67	1XD–F1981–00	BRKT., RR. AXLE	1					
68	90105–12082	BOLT, FLANGE	1					
69	90185–12002	NUT, SELF-LOCKING	1					
70	92902–12200	WASHER	2					
71	95812–08016	BOLT, FLANGE	2					

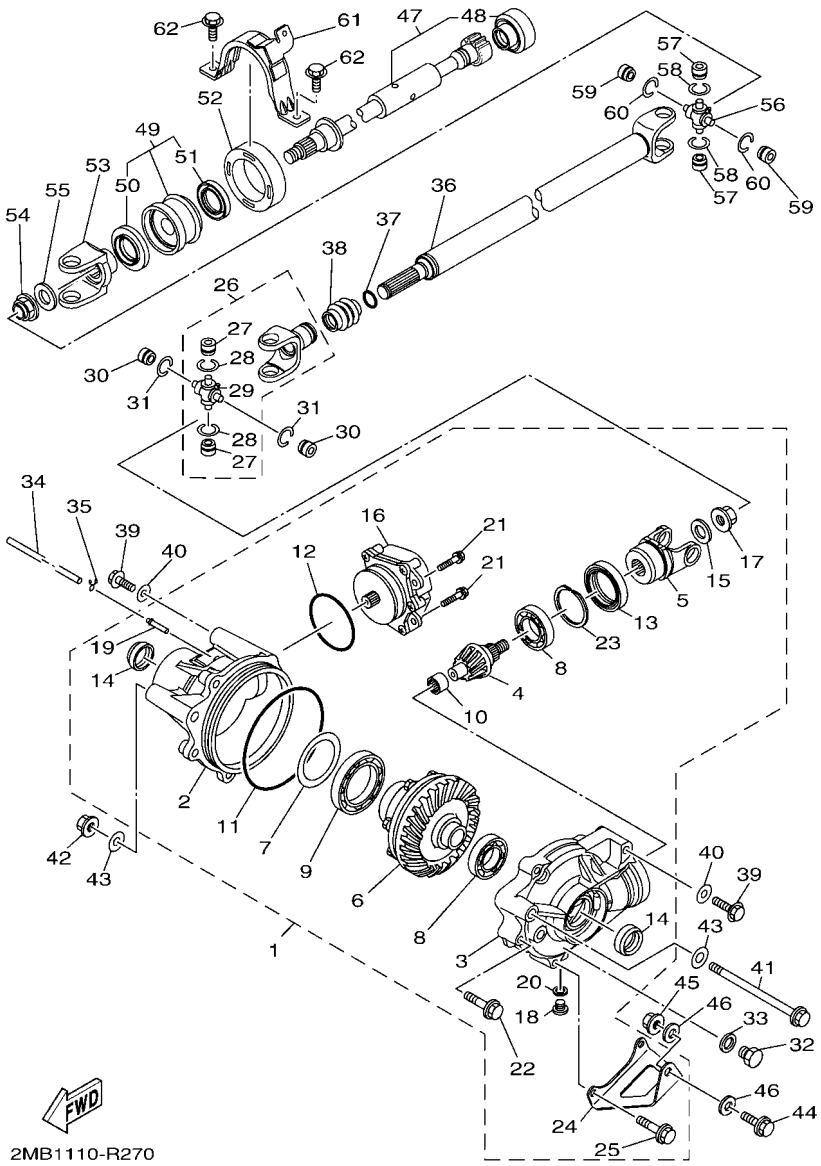

FIG. 28 FRONT DIFFERENTIAL

REF. NO.	PART NO.	DESCRIPTION	USA					REMARKS
1	1XD–46160–00	FRONT AXLE GEAR CASE COMP.	1					
2	1XD–46162–00	.HOUSING, BEARING 2	1					
3	1XD–46161–00	.HOUSING, SHAFT DRIVE 2	1					
4	1XD–46141–00	.PINION, DRIVE 2	1					
5	4S1–46146–00	.YOKE, JOINT 2	1					
6	1XD–46470–00	.LIMITED SLIP DIFF. ASSY	1					
7	3B4–46117–00	.SHIM, RING GEAR (0.1T)	1					UR
	3B4–46117–10	.SHIM, RING GEAR (0.2T)	1					UR
	3B4–46117–20	.SHIM, RING GEAR (0.3T)	1					UR
	3B4–46117–30	.SHIM, RING GEAR (0.4T)	1					UR
8	93306–00613	.BEARING	2					
9	3B4–46164–00	.BEARING 1	1					
10	3B4–46166–00	.BEARING 3	1					
11	3B4–46134–00	.O-RING 1	1					
12	3B4–46135–00	.O-RING 2	1					
13	93105–46001	.OIL SEAL	1					
14	3B4–46163–00	.SEAL, OIL 1	2					
15	3B4–47359–00	.WASHER	1					
16	1HP–4616A–00	.SERVO MOTOR COMP	1					
17	4WV–46145–10	.NUT 1	1					
18	90340–10001	.PLUG, STRAIGHT SCREW	1					
19	5GH–46293–00	.TUBE	1					
20	90430–10003	.GASKET	1					
21	95812–06014	.BOLT, FLANGE	3					
22	95812–08040	.BOLT, FLANGE	3					
23	3B4–46142–00	.RING,HOLE SNAP 1	1					
24	1XD–46114–00	.PLATE, COVER	1					

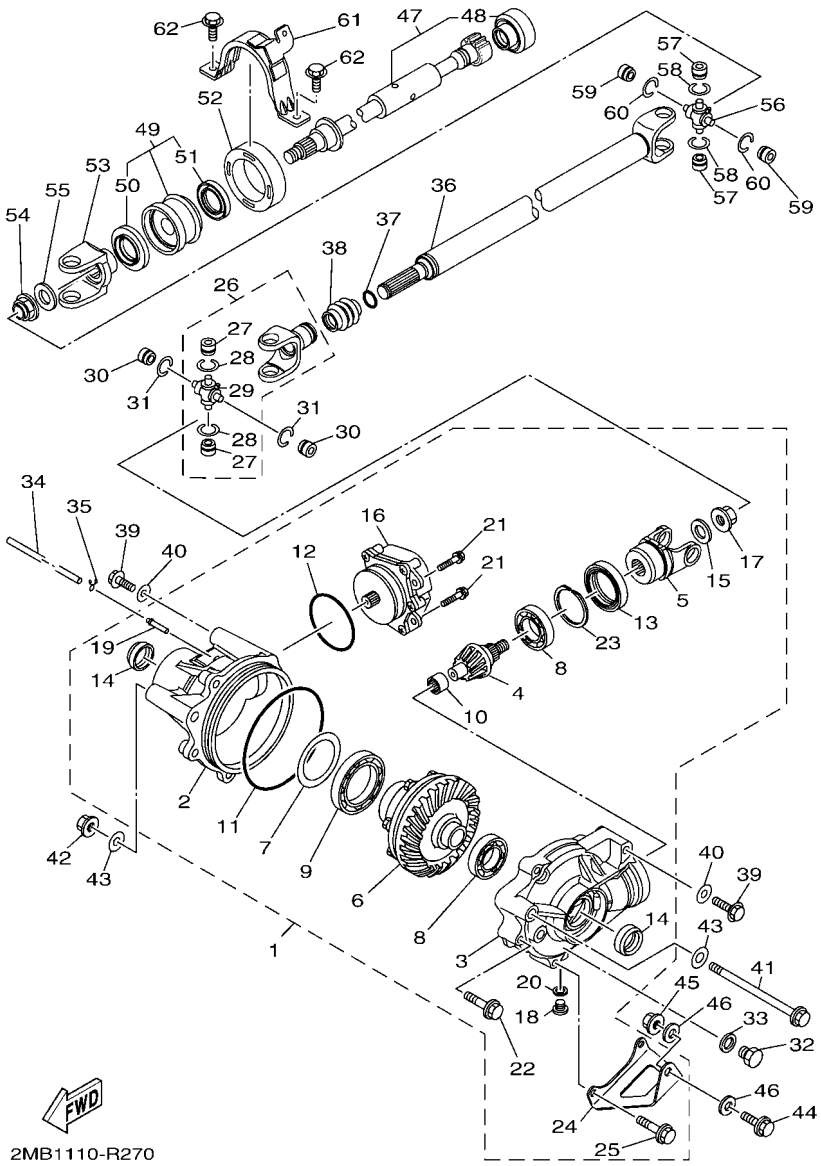

FIG. 28 FRONT DIFFERENTIAL

REF. NO.	PART NO.	DESCRIPTION	USA					REMARKS
25	95812–08050	.BOLT, FLANGE	2					
26	2HC–46107–00	CROSS JOINT COMP. 2	1					
27	93399–99948	.BEARING	2					
28	93440–20088	.CIRCLIP	2					
29	5GT–46187–00	.SPIDER	1					
30	93399–99948	BEARING	2					
31	93440–20088	CIRCLIP	2					
32	90340–14029	PLUG, STRAIGHT SCREW	1					
33	214–11198–01	GASKET	1					
34	90445–07809	HOSE (L750)	1					
35	90467–07029	CLIP	1					
36	2MB–46109–00	DRIVE SHAFT COMP.	1					
37	93210–16M69	O-RING	1					
38	5GT–46136–00	SEAL 1	1					
39	90105–10255	BOLT, FLANGE	2					
40	90201–10035	WASHER, PLATE	2					
41	90105–12066	BOLT, FLANGE	1					
42	90185–12002	NUT, SELF-LOCKING	1					
43	92902–12200	WASHER	2					
44	95812–10025	BOLT, FLANGE	1					
45	90185–10011	NUT, SELF-LOCKING	1					
46	90201–10035	WASHER, PLATE	2					
47	1XD–46173–00	SHAFT, DRIVE 2	1					
48	5KM–46137–00	.SEAL 2	1					
49	2MB–46106–00	BEARING ASSY	1					
50	93102–30010	.OIL SEAL	1					
51	93102–30170	.OIL SEAL	1					

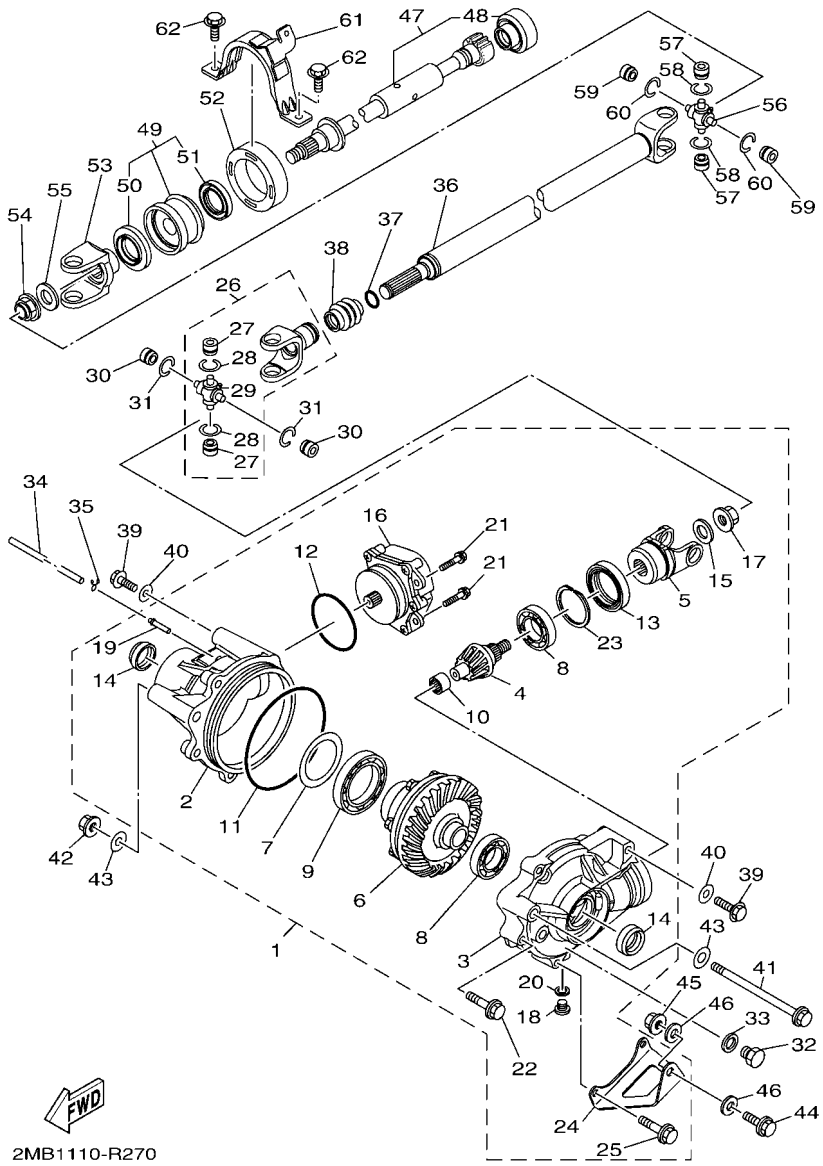

FIG. 28 FRONT DIFFERENTIAL

REF. NO.	PART NO.	DESCRIPTION	USA					REMARKS
52	1XD–4581J–00	RUBBER SHAFT COUPLING	1					
53	5B4–17556–00	YOKE, JOINT	1					
54	90179–16015	NUT	1					
55	90201–16021	WASHER, PLATE	1					
56	5GT–46187–00	SPIDER	1					
57	93399–99948	BEARING	2					
58	93440–20088	CIRCLIP	2					
59	93399–99948	BEARING	2					
60	93440–20088	CIRCLIP	2					
61	1XD–4613F–00	COVER 1	1					
62	95812–08020	BOLT, FLANGE	2					

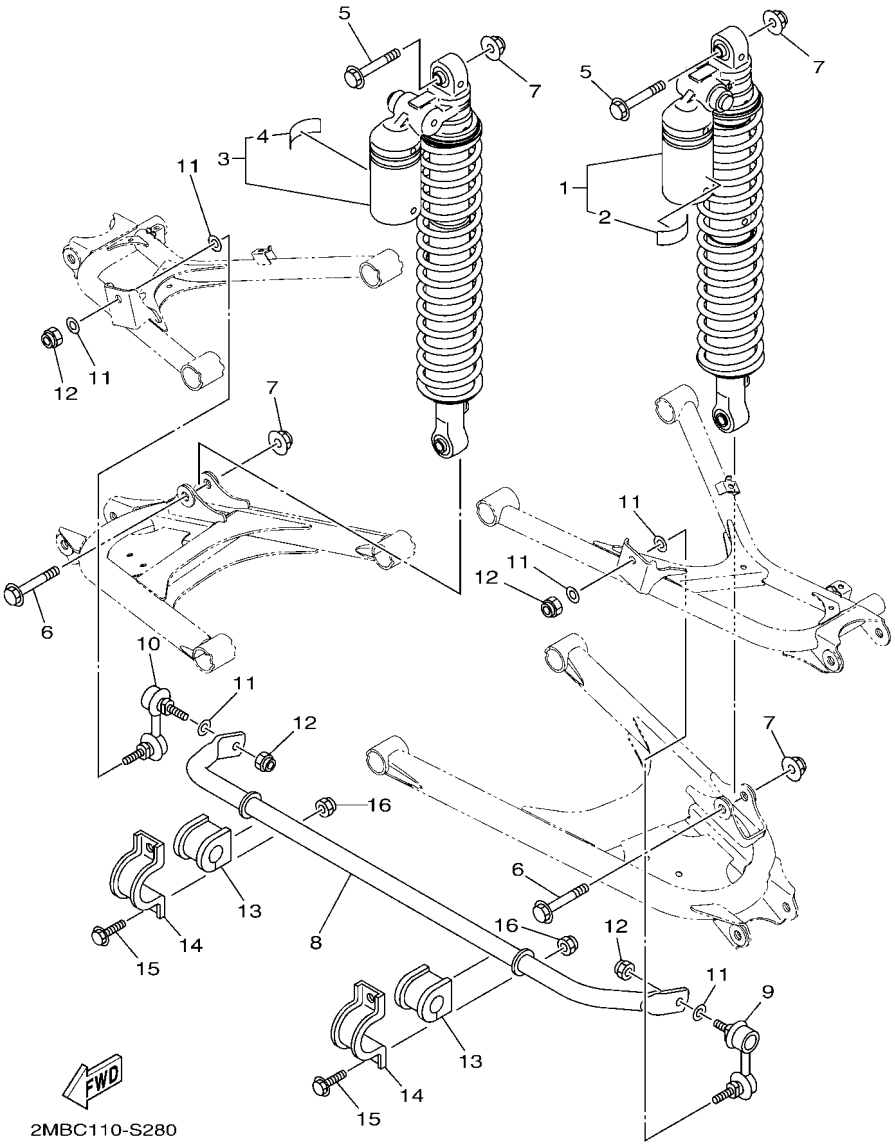

FIG. 29 REAR SUSPENSION

REF. NO.	PART NO.	DESCRIPTION	USA					REMARKS
1	2MB–F220T–00	RR. SHOCK ABSORBER ASSY. ,1	1					
2	1HP–F2259–01	.LABEL, WARNING	1					
3	2MB–F220U–00	RR. SHOCK ABSORBER ASSY. ,2	1					
4	1HP–F2259–01	.LABEL, WARNING	1					
5	90105–12056	BOLT, FLANGE	2					
6	90105–12055	BOLT, FLANGE	2					
7	90185–12009	NUT, SELF-LOCKING	4					
8	2MB–G7491–00	BAR, STABILIZER	1					
9	16B–2385M–10	JOINT, STABILIZER 2	1					
10	16B–2385L–10	JOINT, STABILIZER 1	1					
11	90201–10035	WASHER, PLATE	6					
12	90185–10012	NUT, SELF-LOCKING	4					
13	1XD–F386G–00	BUSH, STABILIZER FRONT	2					
14	1XD–F386H–00	COVER, STABILIZER FRONT	2					
15	95812–10020	BOLT, FLANGE	4					
16	90185–10011	NUT, SELF-LOCKING	4					

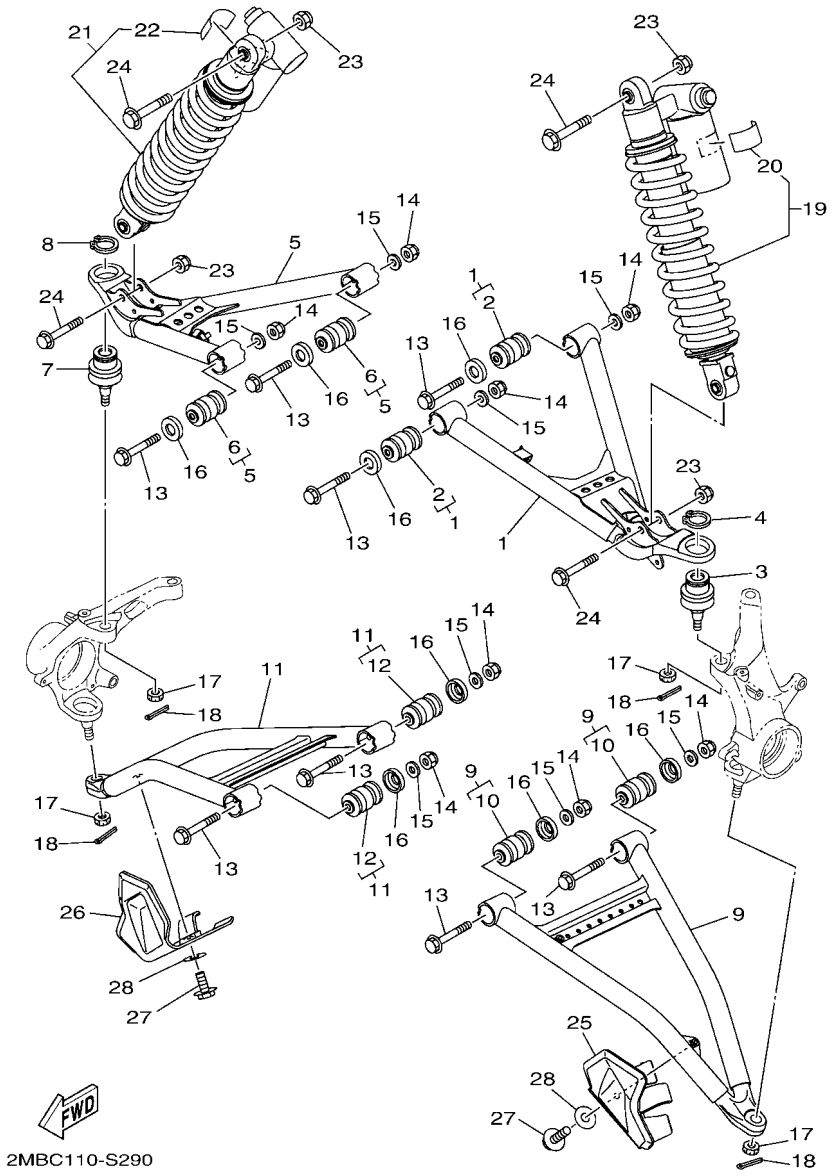

FIG. 30 FRONT SUSPENSION & WHEEL

REF. NO.	PART NO.	DESCRIPTION	USA					REMARKS
1	1XD–F3540–00	FRONT UPPER ARM COMP. (LEFT)	1					
2	1HP–F3526–00	.BUSH	2					
3	1XD–23579–00	BALL JOINT 2	1					
4	99009–32400	CIRCLIP	1					
5	1XD–F3550–00	FRONT UPPER ARM COMP. (RIGHT)	1					
6	1HP–F3526–00	.BUSH	2					
7	1XD–23579–00	BALL JOINT 2	1					
8	99009–32400	CIRCLIP	1					
9	2MB–F3570–00	FRONT LOWER ARM COMP. (LEFT)	1					
10	1HP–F3526–00	.BUSH	2					
11	2MB–F3580–00	FRONT LOWER ARM COMP. (RIGHT)	1					
12	1HP–F3526–00	.BUSH	2					
13	90105–10267	BOLT, FLANGE	8					
14	90185–10012	NUT, SELF-LOCKING	8					
15	90201–10035	WASHER, PLATE	8					
16	5KM–22149–10	WASHER	8					
17	90171–12001	NUT, CASTLE	4					
18	91402–25020	PIN, COTTER	4					
19	2MB–F350A–00	FR. SHOCK ABSORBER ASSY. ,1	1					
20	1HP–F2259–01	.LABEL, WARNING	1					
21	2MB–F350B–00	FR. SHOCK ABSORBER ASSY. ,2	1					
22	1HP–F2259–01	.LABEL, WARNING	1					
23	90185–10012	NUT, SELF-LOCKING	4					
24	90105–10283	BOLT, FLANGE	4					
25	2MB–F3123–00	COVER, UNDER 1	1					
26	2MB–F3133–00	COVER, LOWER 2	1					
27	90119–06137	BOLT, WITH WASHER	2					

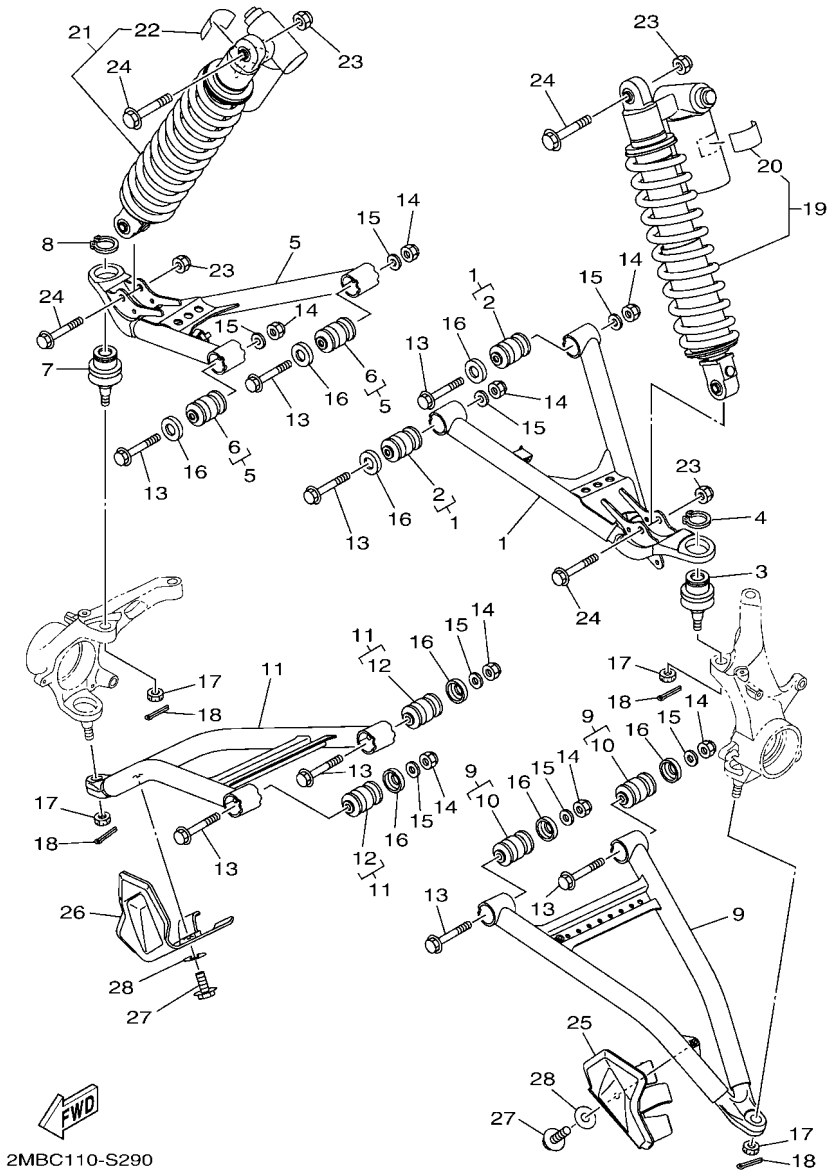

FIG. 30 FRONT SUSPENSION & WHEEL

REF. NO.	PART NO.	DESCRIPTION	USA					REMARKS
28	90201–06036	WASHER, PLATE	2					

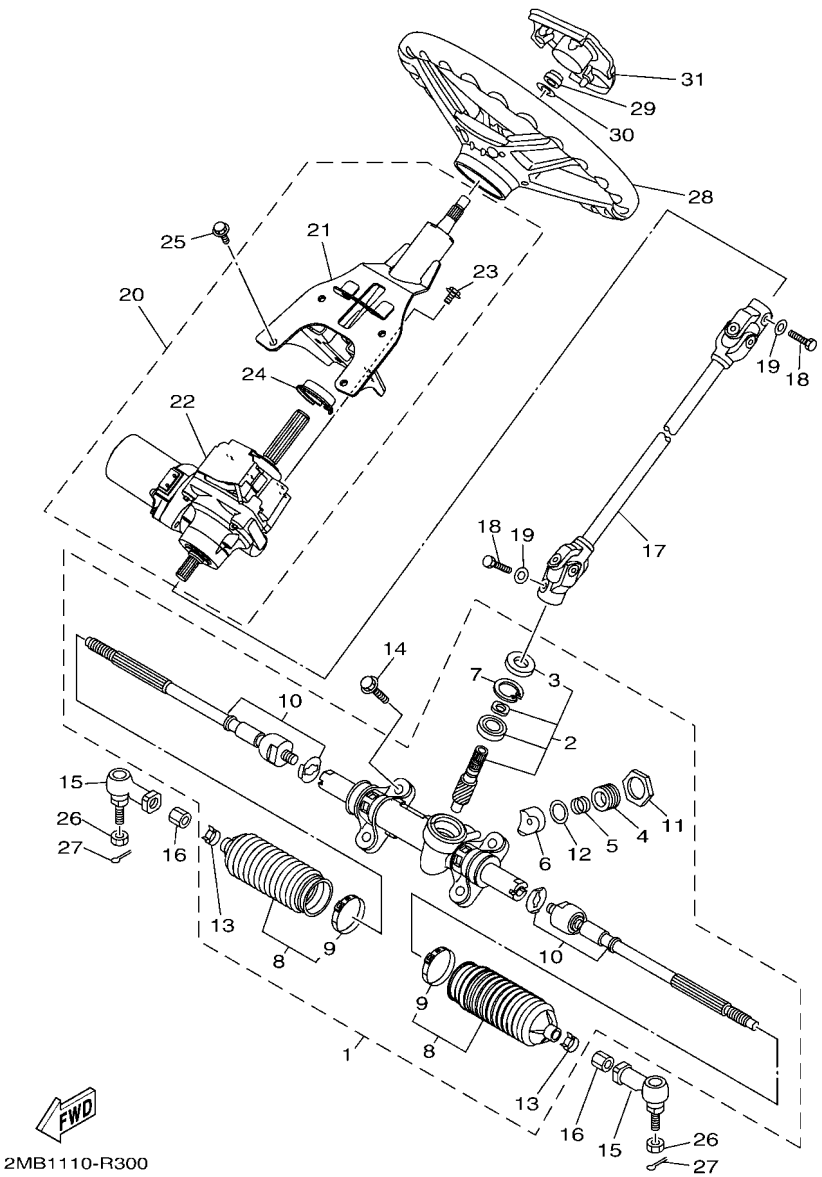

FIG. 31 STEERING

REF. NO.	PART NO.	DESCRIPTION	USA					REMARKS
1	1XD–F3400–00	STEERING ASSY	1					
2	1XD–F38G0–00	.STEERING PINION SET	1					
3	1XD–F3844–00	..SEAL	1					
4	1XD–F387G–00	.COVER, ADJUST	1					
5	1XD–F387K–00	.SPRING, PRESSURE	1					
6	1XD–F387F–00	.PAD, PRESSURE	1					
7	1XD–F387J–00	.RING, STOPPER	1					
8	1XD–F1208–00	.SEAL SET, 1	2					
9	1XD–F3489–00	..BAND	1					
10	1XD–F38H0–00	.RACK END SET	2					
11	1XD–F178K–00	.LOCK ASSY	1					
12	1XD–F3165–00	.WASHER, FELT	1					
13	1XD–F3447–00	.CLIP	2					
14	95022–10030	BOLT, FLANGE	4					
15	5B4–23841–00	JOINT, UNIVERSAL 1	2					
16	2PG–F3833–00	NUT 1	2					
17	2MB–F3840–00	STEERING SHAFT ASSY	1					
18	91312–08025	BOLT	2					
19	90201–083P5	WASHER, PLATE	2					
20	2MB–23810–00	STEERING COLUMN ASSY	1					
21	2MB–23813–00	.COLUMN, STEERING 2	1					
22	2MB–238B0–00	.POWER STRG. ACTUATOR ASSY	1					
23	95812–08020	.BOLT, FLANGE	4					
24	2MB–2384L–00	.COVER, DUST	1					
25	95812–08020	BOLT, FLANGE	4					
26	90171–12001	NUT, CASTLE	2					
27	91402–20020	PIN, COTTER	2					

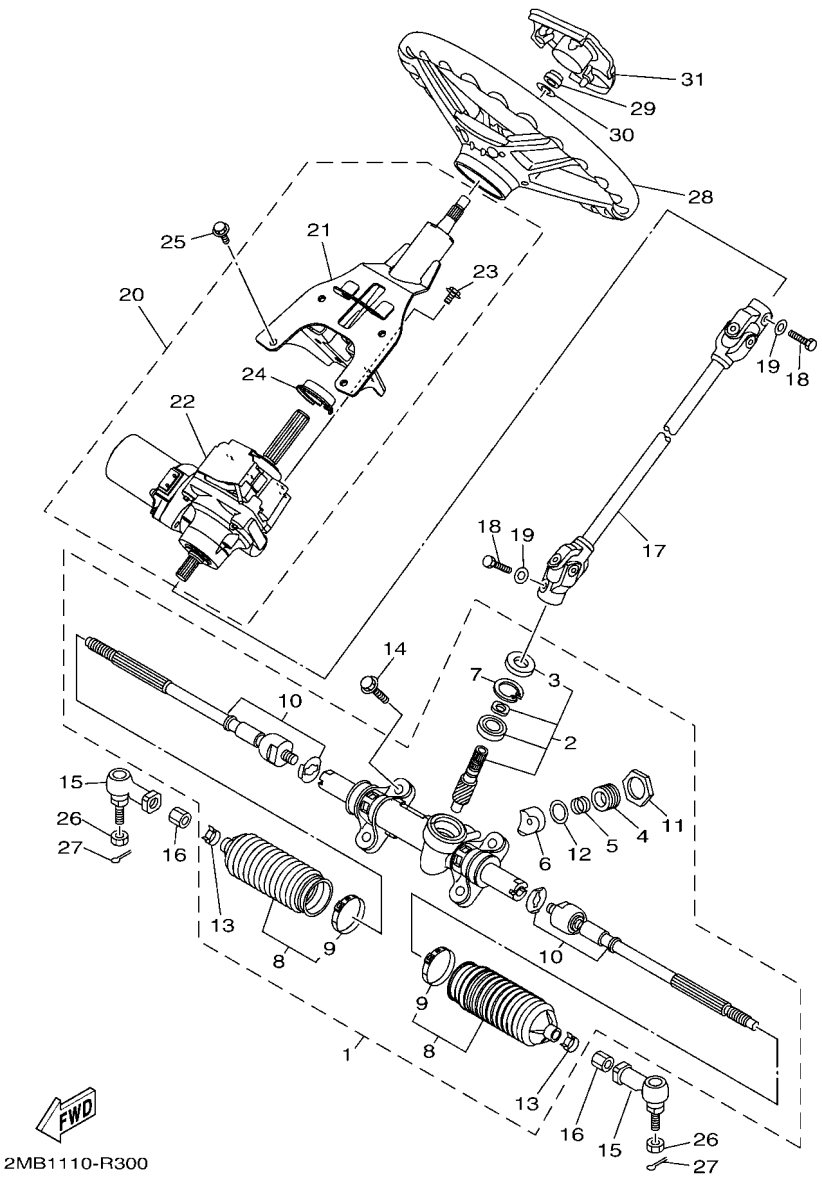

FIG. 31 STEERING

REF. NO.	PART NO.	DESCRIPTION	USA					REMARKS
28	16B–F3838–00	WHEEL, STEERING	1					
29	90185–12008	NUT, SELF-LOCKING	1					
30	92902–12200	WASHER	1					
31	1XD–F3818–00	COVER, STEERING	1					

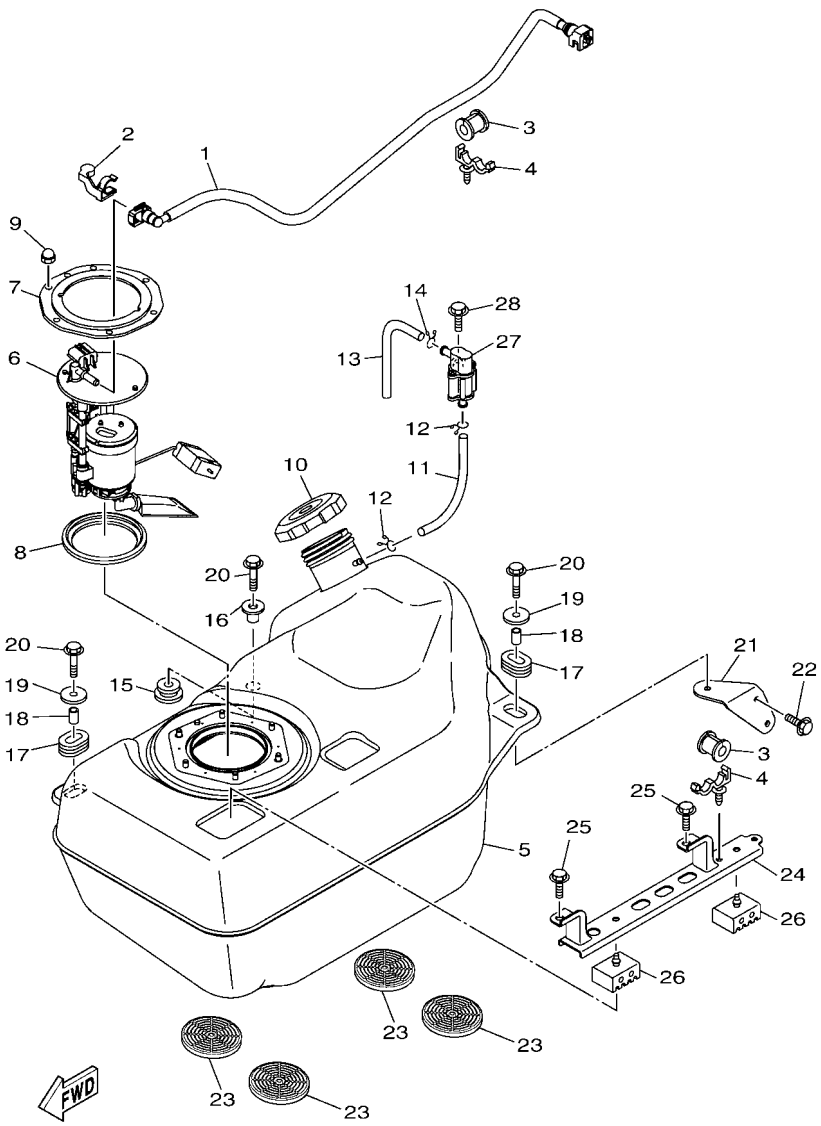

2MB1110-R310

FIG. 32 FUEL TANK

REF. NO.	PART NO.	DESCRIPTION	USA					REMARKS
1	2MB–13971–00	PIPE, FUEL 1	1					
2	90464–14004	CLAMP	1					
3	90480–20543	GROMMET	2					
4	90464–20010	CLAMP	2					
5	1XD–F4110–00	FUEL TANK COMP.	1					
6	3B4–13907–10	FUEL PUMP COMP.	1					
7	3B4–24491–00	BRACKET, FUEL PUMP	1					
8	1S3–24486–00	O-RING	1					
9	95302–06800	NUT, CROWN	6					
10	2P5–24610–00	CAP ASSY	1					
11	90445–09827	HOSE (L160)	1					
12	90467–09006	CLIP	2					
13	90445–09826	HOSE (L85)	1					
14	90467–09006	CLIP	1					
15	90480–18016	GROMMET	1					
16	90387–07021	COLLAR	1					
17	90480–01400	GROMMET	2					
18	90387–061V1	COLLAR	2					
19	90201–065G8	WASHER, PLATE	2					
20	95802–06030	BOLT, FLANGE	3					
21	2MB–F4291–00	BRACKET, FUEL TANK 1	1					
22	90105–06831	BOLT, FLANGE	2					
23	2MB–F4181–00	DAMPER, LOCATING 1	4					
24	2MB–F4157–00	STAY, FUEL TANK 1	1					
25	90105–08867	BOLT, FLANGE	2					
26	2MB–F4182–00	DAMPER, LOCATING 2	2					
27	28P–24380–00	PIPE JOINT ASSY	1					

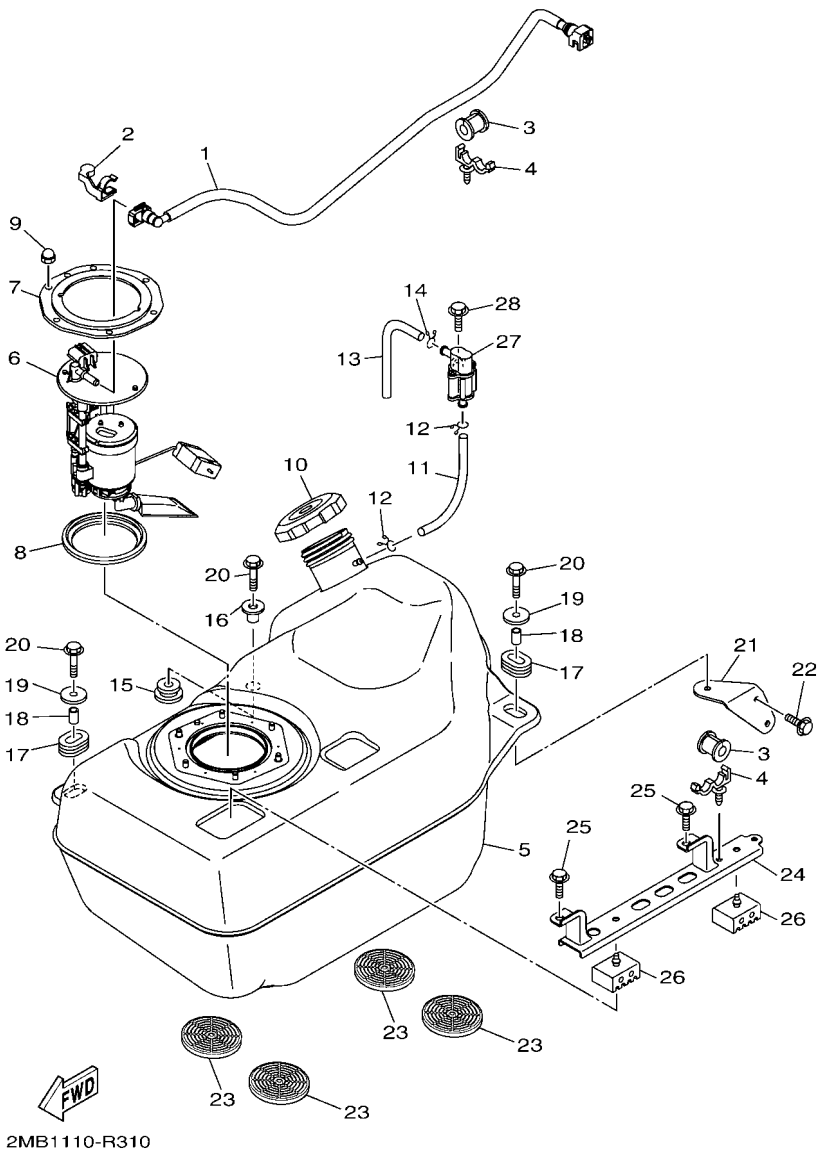

FIG. 32 FUEL TANK

REF. NO.	PART NO.	DESCRIPTION	USA					REMARKS
28	90105–06832	BOLT, FLANGE	1					

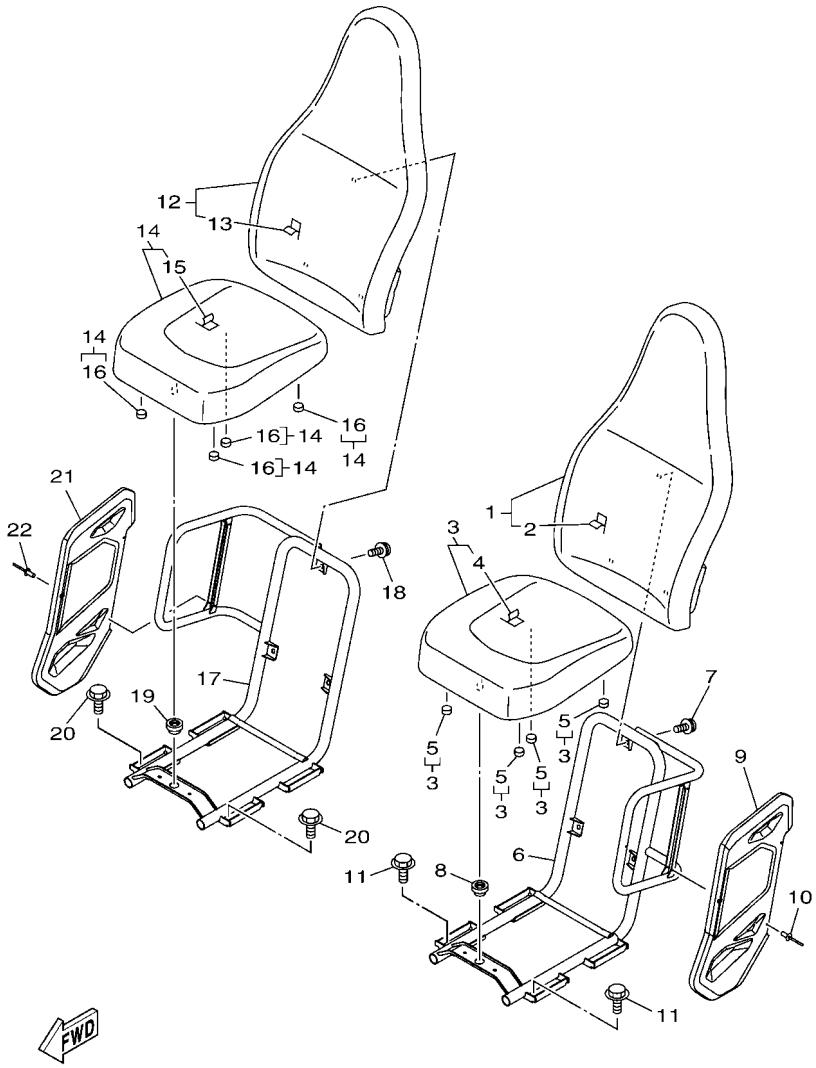

2MB1110-R320

FIG. 33 SEAT

REF. NO.	PART NO.	DESCRIPTION	USA					REMARKS
1	2MB–F4790–00	SEAT BACK ASSY	1					
2	2MB–F4711–00	.COVER, SINGLE SEAT	1					
3	1XD–F4700–00	SEAT ASSY	1					
4	1XD–F4731–00	.COVER, SEAT	1					
5	1XD–F4723–00	.DAMPER, SEAT	4					
6	1XD–F473C–00	FRAME, SEAT 1	1					
7	2PG–F4739–00	BOLT, SEAT FITTING	3					
8	1XD–F4742–00	GROMMET	1					
9	1XD–F475X–00	COVER,2	1					
10	90267–489U9	RIVET, BLIND	3					
11	95812–08012	BOLT, FLANGE	4					
12	2MB–F4790–00	SEAT BACK ASSY	1					
13	2MB–F4711–00	.COVER, SINGLE SEAT	1					
14	1XD–F4700–00	SEAT ASSY	1					
15	1XD–F4731–00	.COVER, SEAT	1					
16	1XD–F4723–00	.DAMPER, SEAT	4					
17	1XD–F473D–00	FRAME, SEAT 2	1					
18	2PG–F4739–00	BOLT, SEAT FITTING	3					
19	1XD–F4742–00	GROMMET	1					
20	95812–08012	BOLT, FLANGE	4					
21	1XD–F475X–00	COVER,2	1					
22	90267–489U9	RIVET, BLIND	3					

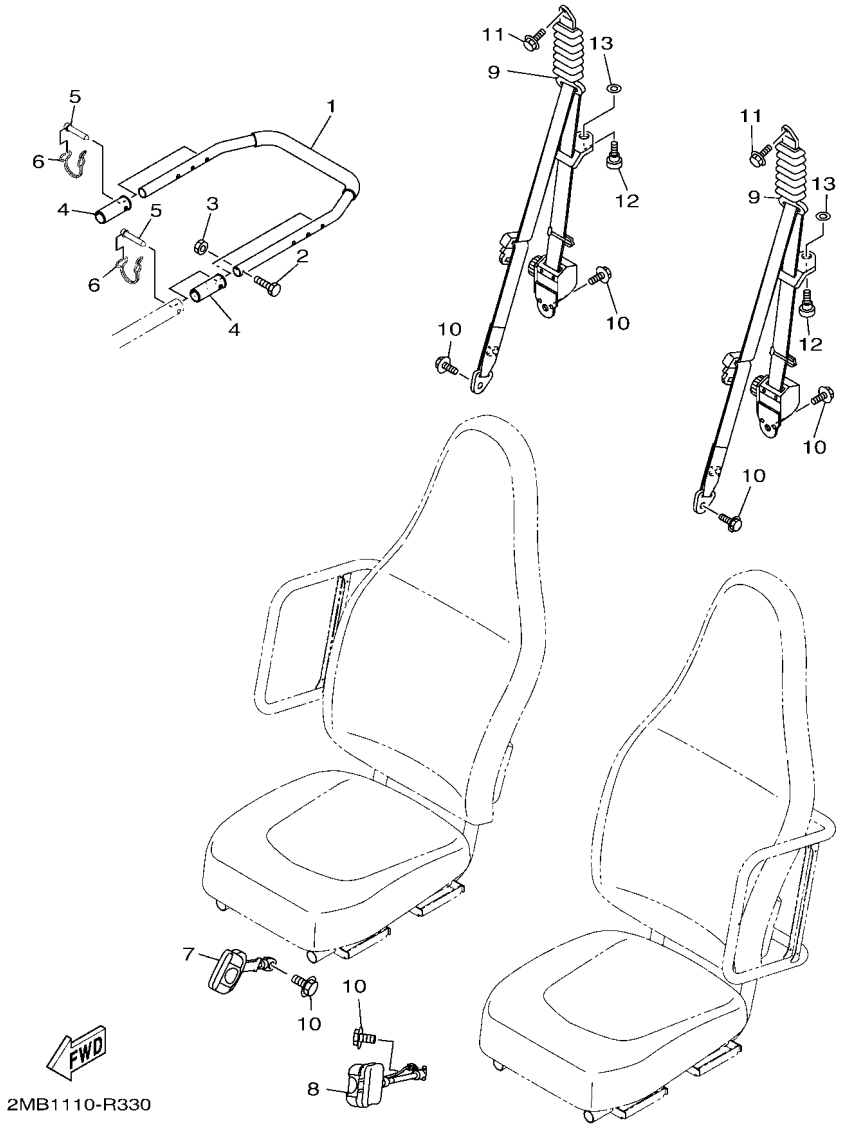

FIG. 34 SEAT 2

REF. NO.	PART NO.	DESCRIPTION	USA					REMARKS
1	2MB–F470J–00	ASSIST GRIP ASSY., 1	1					
2	90101–06824	BOLT	1					
3	95612–06100	NUT, U	1					
4	1XD–F467K–00	BUSH, CAP	2					
5	1XD–F5926–00	BOLT	2					
6	1XD–F311F–00	SNAP, PIN	2					
7	2PG–F470R–00	FR. BELT RECEIVER ASSY	1					
8	2PG–F470R–10	FR. BELT RECEIVER ASSY	1					
9	1XD–F470L–00	FR. SEAT BELT ASSY 1	2					
10	95812–12020	BOLT, FLANGE	6					
11	90111–12002	BOLT,HEX. SOCKET BUTTON	2					
12	16B–F3394–01	BOLT, SPECIAL	2					
13	90201–11801	WASHER, PLATE	2					

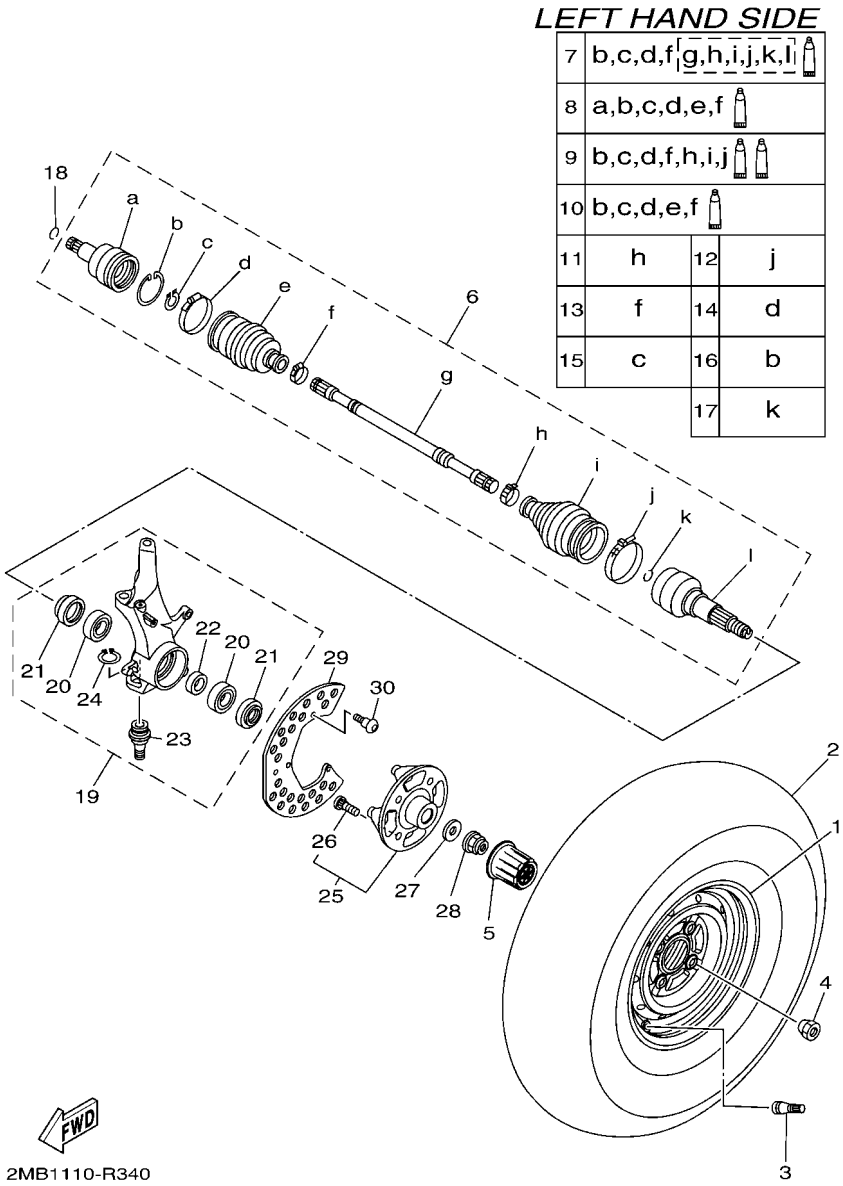

FIG. 35 FRONT WHEEL

REF. NO.	PART NO.	DESCRIPTION	USA					REMARKS
1	1XD–F5180–00	WHEEL COMP.	1					
2	94108–12821	TIRE (26X8.00-12 MU09 2PR TL)	1					MAXXIS
3	93900–00813	VALVE, RIM (TR413)	1					MAXXIS
4	90179–12262	NUT	4					
5	2MB–F512A–00	CAP, WHEEL	1					
6	1XD–F518F–00	DRIVE SHAFT ASSY	1					
7	1XD–F530T–10	.BALL JOINT SET	1					
8	1XD–F530V–10	.DOUBLE OFF SET JOINT	1					
9	1XD–F530X–10	.BOOT SET (BALL JOINT)	1					
10	1XD–F530Y–10	.BOOT SET(DOUBLE OFFSET JOINT)	1					
11	1XD–F511H–00	.BOOT BAND(DOUBLE OFFSET JOINT)	1					
12	1XD–F511G–00	.BOOT BAND (BALL JOINT)	1					
13	5UG–F510U–00	.BOOT BAND (SMALL)	1					
14	1XD–F512G–10	.BOOT BAND (SMALL)	1					
15	3B4–2512J–00	.SNAP RING	1					
16	3B4–25182–00	.CIRCLIP	1					
17	5UG–F512H–00	.CIRCLIP	1					
18	93450–22119	CIRCLIP	1					
19	1XD–F3501–00	STEERING KNUCKLE ASSY (LEFT)	1					
20	93306–20725	.BEARING	2					
21	93106–50002	.OIL SEAL	2					
22	90387–35007	.COLLAR	1					
23	1XD–23579–00	.BALL JOINT 2	1					
24	99009–32400	.CIRCLIP	1					
25	2MB–F510D–00	HUB ASSY 2	1					
26	90114–12002	.BOLT, SERRATION	4					
27	90201–25023	WASHER, PLATE	1					

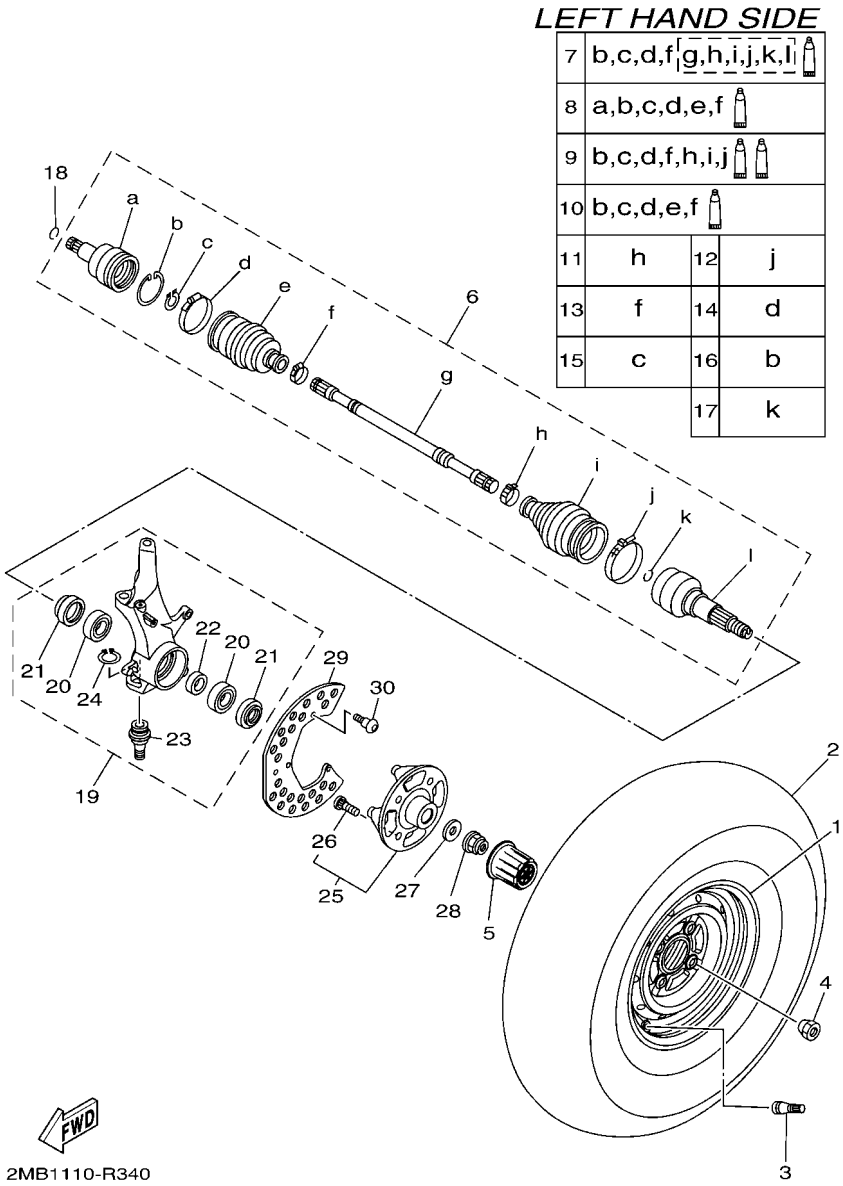

FIG. 35 FRONT WHEEL

REF. NO.	PART NO.	DESCRIPTION	USA					REMARKS
28	90179–24006	NUT	1					
29	1XD–F514A–01	RING, WHEEL 1	1					
30	92012–06012	BOLT, BUTTON HEAD	3					

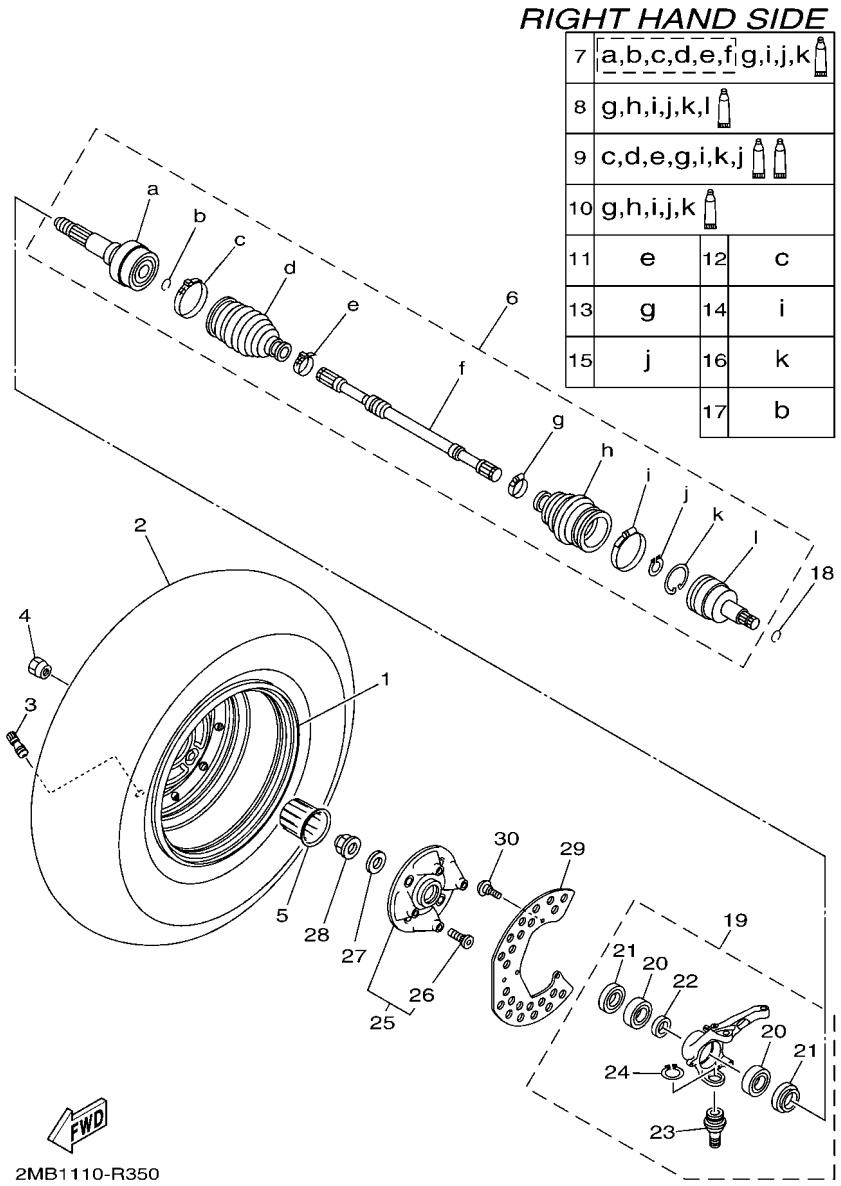

FIG. 36 FRONT WHEEL 2

REF. NO.	PART NO.	DESCRIPTION	USA					REMARKS
1	1XD–F5180–00	WHEEL COMP.	1					
2	94108–12821	TIRE (26X8.00-12 MU09 2PR TL)	1					MAXXIS
3	93900–00813	VALVE, RIM (TR413)	1					MAXXIS
4	90179–12262	NUT	4					
5	2MB–F512A–00	CAP, WHEEL	1					
6	1XD–F518F–00	DRIVE SHAFT ASSY	1					
7	1XD–F530T–10	.BALL JOINT SET	1					
8	1XD–F530V–10	.DOUBLE OFF SET JOINT	1					
9	1XD–F530X–10	.BOOT SET (BALL JOINT)	1					
10	1XD–F530Y–10	.BOOT SET(DOUBLE OFFSET JOINT)	1					
11	1XD–F511H–00	.BOOT BAND(DOUBLE OFFSET JOINT)	1					
12	1XD–F511G–00	.BOOT BAND (BALL JOINT)	1					
13	5UG–F510U–00	.BOOT BAND (SMALL)	1					
14	1XD–F512G–10	.BOOT BAND (SMALL)	1					
15	3B4–2512J–00	.SNAP RING	1					
16	3B4–25182–00	.CIRCLIP	1					
17	5UG–F512H–00	.CIRCLIP	1					
18	93450–22119	CIRCLIP	1					
19	1XD–F3502–00	STEERING KNUCKLE ASSY (RIGHT)	1					
20	93306–20725	.BEARING	2					
21	93106–50002	.OIL SEAL	2					
22	90387–35007	.COLLAR	1					
23	1XD–23579–00	.BALL JOINT 2	1					
24	99009–32400	.CIRCLIP	1					
25	2MB–F510D–00	HUB ASSY 2	1					
26	90114–12002	.BOLT, SERRATION	4					
27	90201–25023	WASHER, PLATE	1					

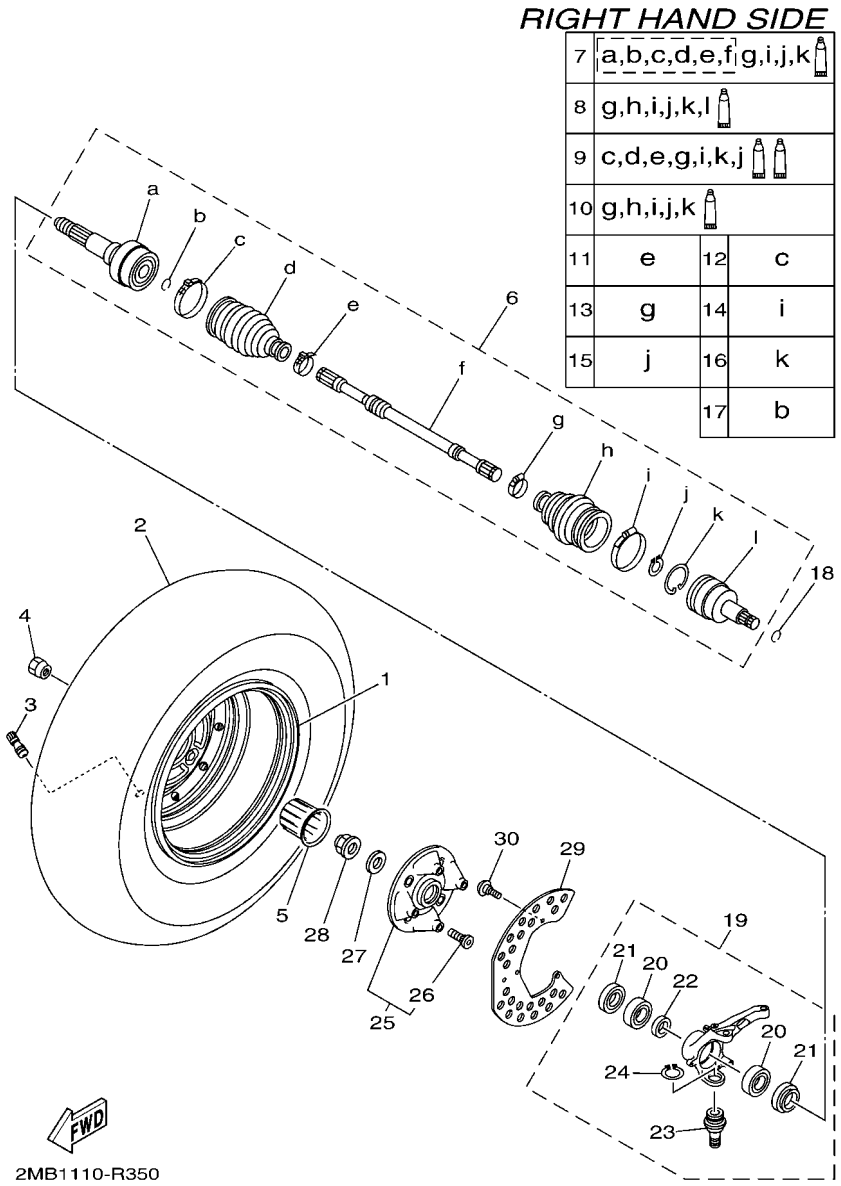

FIG. 36 FRONT WHEEL 2

REF. NO.	PART NO.	DESCRIPTION	USA					REMARKS
28	90179–24006	NUT	1					
29	1XD–F514A–01	RING, WHEEL 1	1					
30	92012–06012	BOLT, BUTTON HEAD	3					

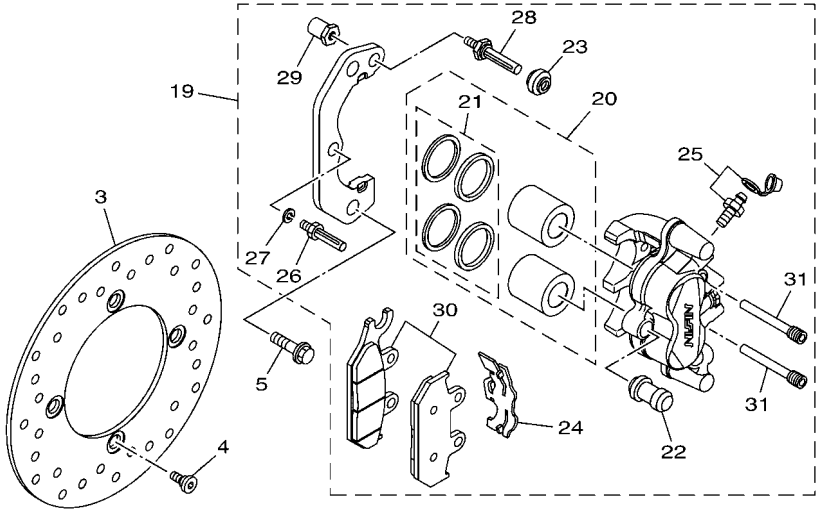

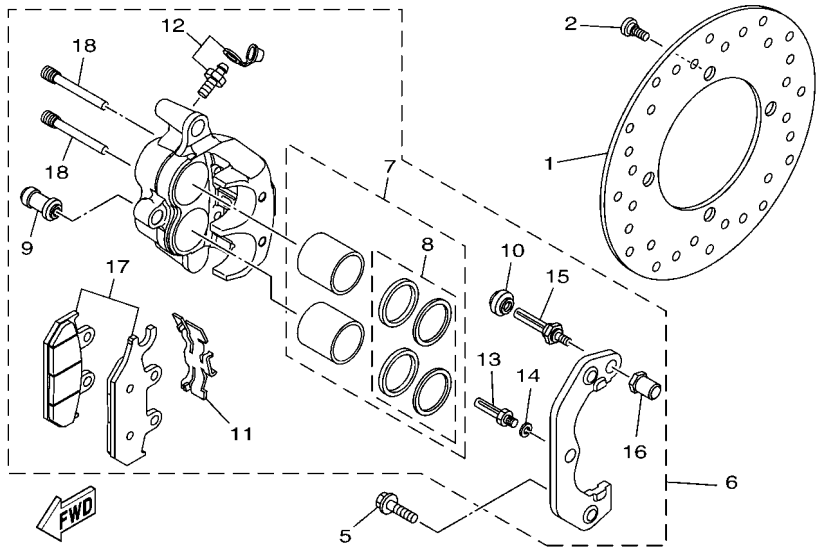

2MB1110-R360

FIG. 37 FRONT BRAKE CALIPER

REF. NO.	PART NO.	DESCRIPTION	USA					REMARKS
1	2MB–F582T–00	DISC, BRAKE (LEFT)	1					
2	90109–08082	BOLT	4					
3	2MB–F582T–00	DISC, BRAKE (LEFT)	1					
4	90109–08082	BOLT	4					
5	90105–10265	BOLT, FLANGE	4					
6	1XD–2580T–00	CALIPER ASSY (LEFT)	1					
7	1XD–25802–00	.PISTON ASSY, CALIPER	1					
8	1XD–25803–00	..CALIPER SEAL KIT	1					
9	1UY–25937–51	.BOOT 2	1					
10	3JD–25917–00	.BOOT, CALIPER	1					
11	1XD–25919–00	.SUPPORT, PAD	1					
12	1UY–W0048–50	.BLEED SCREW KIT	1					
13	1UY–25926–51	.BOLT	1					
14	1UY–25938–51	.WASHER, SPRING	1					
15	3JD–25926–00	.BOLT	1					
16	3JD–25961–00	.NUT	1					
17	1XD–25805–00	.BRAKE PAD KIT	1					
18	3TB–25933–00	.WASHER, PAD PIN	2					
19	1XD–2580U–00	CALIPER ASSY (RIGHT)	1					
20	1XD–25802–00	.PISTON ASSY, CALIPER	1					
21	1XD–25803–00	..CALIPER SEAL KIT	1					
22	1UY–25937–51	.BOOT 2	1					
23	3JD–25917–00	.BOOT, CALIPER	1					
24	1XD–25919–00	.SUPPORT, PAD	1					
25	1UY–W0048–50	.BLEED SCREW KIT	1					
26	1UY–25926–51	.BOLT	1					
27	1UY–25938–51	.WASHER, SPRING	1					

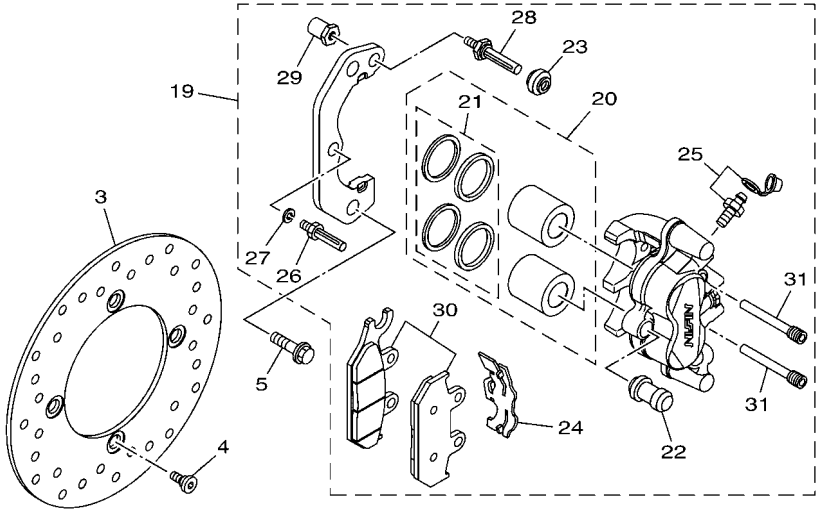

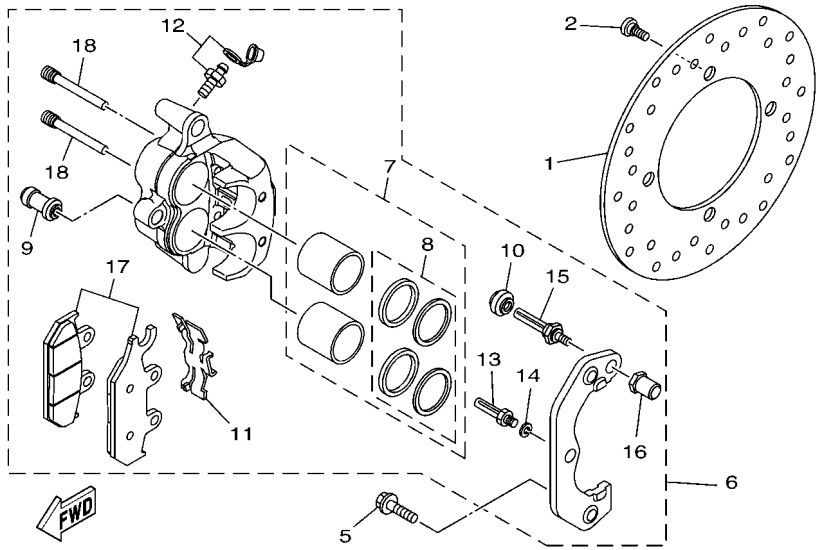

2MB1110-R360

FIG. 37 FRONT BRAKE CALIPER

REF. NO.	PART NO.	DESCRIPTION	USA					REMARKS
28	3JD–25926–00	.BOLT	1					
29	3JD–25961–00	.NUT	1					
30	1XD–25805–10	.BRAKE PAD KIT	1					
31	3TB–25933–00	.WASHER, PAD PIN	2					

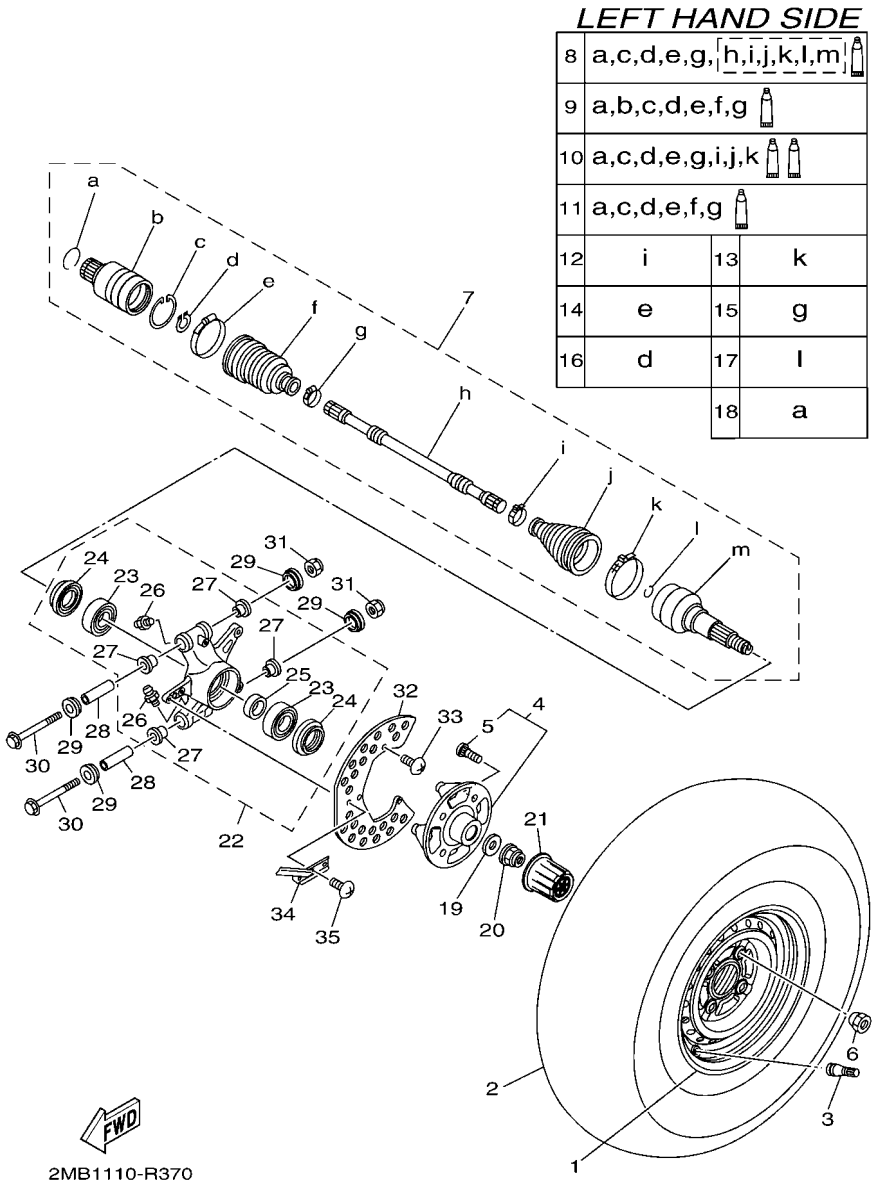

FIG. 38 REAR WHEEL

REF. NO.	PART NO.	DESCRIPTION	USA					REMARKS
1	1XD–F5390–00	REAR WHEEL COMP.	1					
2	94110–12818	TIRE (26X10.00-12 MU10 4PR TL)	1					MAXXIS
3	93900–00813	VALVE, RIM (TR413)	1					MAXXIS
4	2MB–F510D–00	HUB ASSY 2	1					
5	90114–12002	.BOLT, SERRATION	4					
6	90179–12262	NUT	4					
7	1XD–F531H–00	REAR DRIVE SHAFT ASSY	1					
8	1XD–F530T–00	.BALL JOINT SET	1					
9	1XD–F530V–00	.DOUBLE OFF SET JOINT	1					
10	1XD–F530X–00	.BOOT SET (BALL JOINT)	1					
11	1XD–F530Y–00	.BOOT SET(DOUBLE OFFSET JOINT)	1					
12	1XD–F511H–00	.BOOT BAND(DOUBLE OFFSET JOINT)	1					
13	1XD–F511G–00	.BOOT BAND (BALL JOINT)	1					
14	1XD–F512G–00	.BOOT BAND (SMALL)	1					
15	1XD–F510U–00	.BOOT BAND (SMALL)	1					
16	1XD–F512J–00	.SNAP RING	1					
17	5UG–F512H–00	.CIRCLIP	1					
18	1XD–F536E–00	.CLIP, SPRING	1					
19	90201–25023	WASHER, PLATE	1					
20	90179–24006	NUT	1					
21	2MB–F512A–00	CAP, WHEEL	1					
22	1XD–F530F–10	REAR KNUCKLE ASSY	1					
23	93306–20725	.BEARING	2					
24	93106–50002	.OIL SEAL	2					
25	90387–35007	.COLLAR	1					
26	93700–06004	.NIPPLE, GREASE	2					
27	90381–18003	.BUSH, SOLID	4					

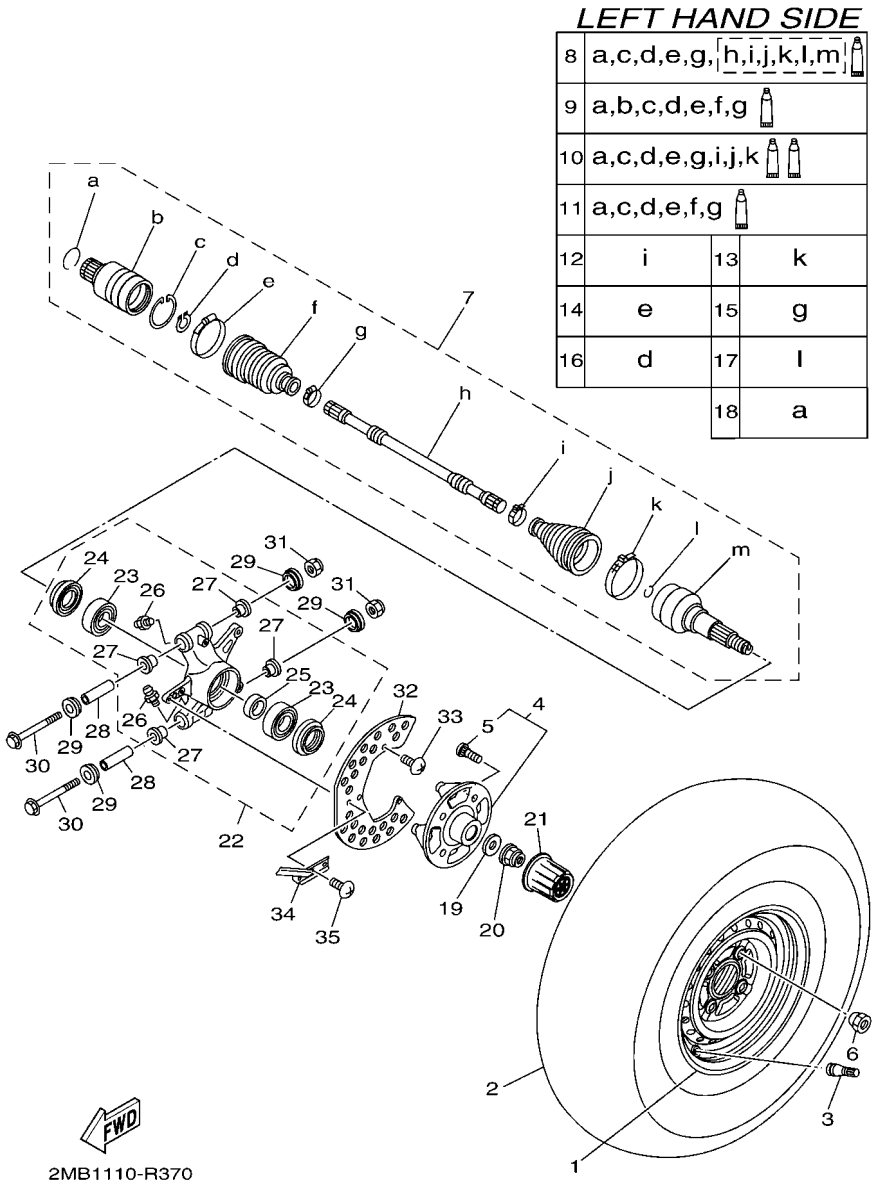

FIG. 38 REAR WHEEL

REF. NO.	PART NO.	DESCRIPTION	USA					REMARKS
28	90387–12N54	COLLAR	2					
29	1XD–23517–00	COVER, THRUST 1	4					
30	90105–12089	BOLT, FLANGE	2					
31	90185–12010	NUT, SELF-LOCKING	2					
32	1XD–F514A–01	RING, WHEEL 1	1					
33	92012–06012	BOLT, BUTTON HEAD	2					
34	1XD–F2341–00	PLATE, GUIDE 1	1					
35	92012–06012	BOLT, BUTTON HEAD	2					

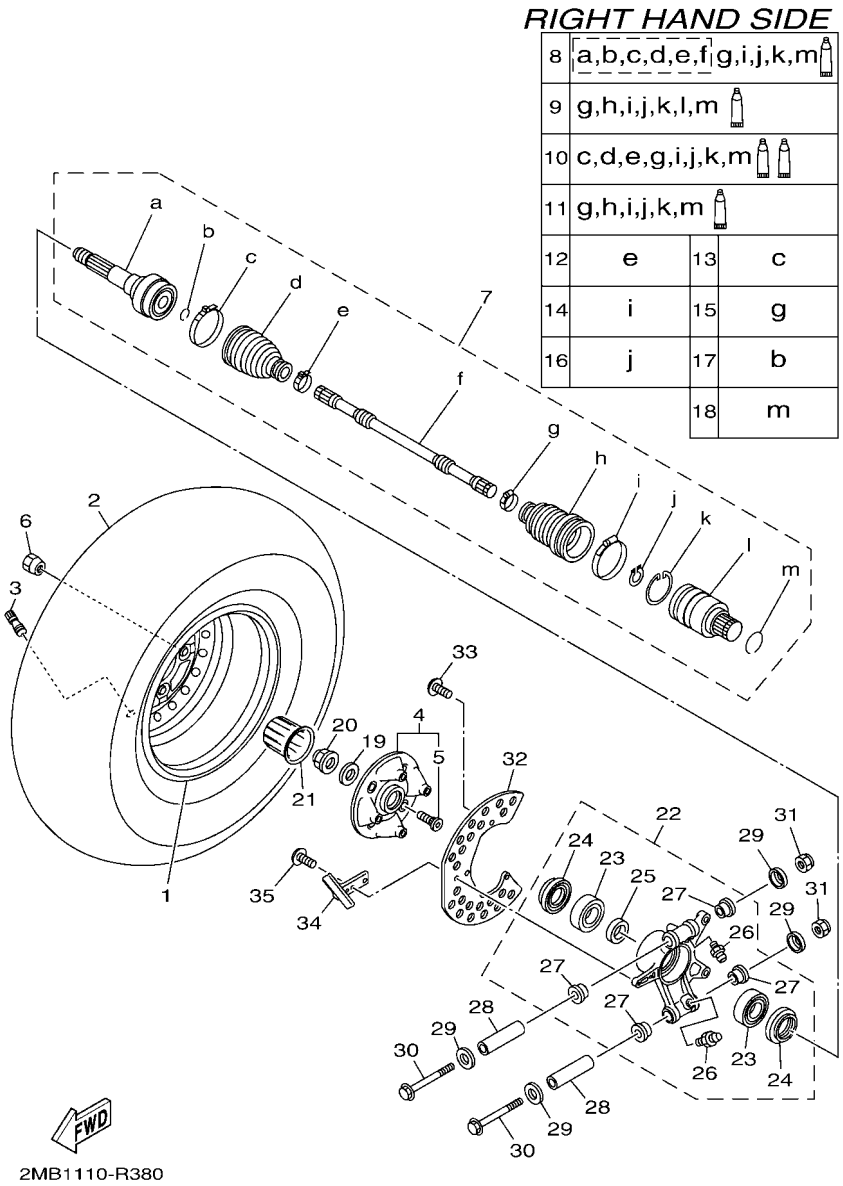

FIG. 39 REAR WHEEL 2

REF. NO.	PART NO.	DESCRIPTION	USA					REMARKS
1	1XD–F5390–00	REAR WHEEL COMP.	1					
2	94110–12818	TIRE (26X10.00-12 MU10 4PR TL)	1					MAXXIS
3	93900–00813	VALVE, RIM (TR413)	1					MAXXIS
4	2MB–F510D–00	HUB ASSY 2	1					
5	90114–12002	.BOLT, SERRATION	4					
6	90179–12262	NUT	4					
7	1XD–F531H–00	REAR DRIVE SHAFT ASSY	1					
8	1XD–F530T–00	.BALL JOINT SET	1					
9	1XD–F530V–00	.DOUBLE OFF SET JOINT	1					
10	1XD–F530X–00	.BOOT SET (BALL JOINT)	1					
11	1XD–F530Y–00	.BOOT SET(DOUBLE OFFSET JOINT)	1					
12	1XD–F511H–00	.BOOT BAND(DOUBLE OFFSET JOINT)	1					
13	1XD–F511G–00	.BOOT BAND (BALL JOINT)	1					
14	1XD–F512G–00	.BOOT BAND (SMALL)	1					
15	1XD–F510U–00	.BOOT BAND (SMALL)	1					
16	1XD–F512J–00	.SNAP RING	1					
17	5UG–F512H–00	.CIRCLIP	1					
18	1XD–F536E–00	.CLIP, SPRING	1					
19	90201–25023	WASHER, PLATE	1					
20	90179–24006	NUT	1					
21	2MB–F512A–00	CAP, WHEEL	1					
22	1XD–F532F–00	REAR KNUCKLE ASSY.,2	1					
23	93306–20725	.BEARING	2					
24	93106–50002	.OIL SEAL	2					
25	90387–35007	.COLLAR	1					
26	93700–06004	.NIPPLE, GREASE	2					
27	90381–18003	.BUSH, SOLID	4					

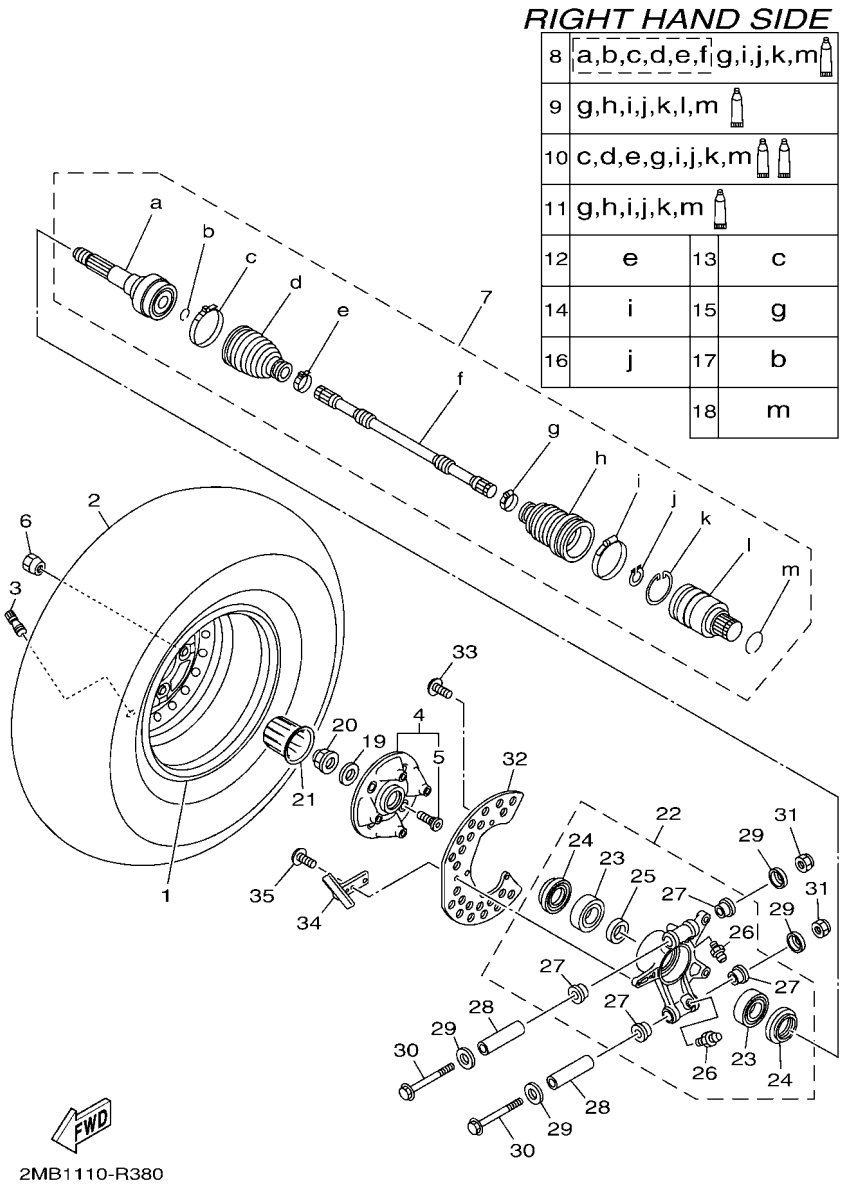

FIG. 39 REAR WHEEL 2

REF. NO.	PART NO.	DESCRIPTION	USA					REMARKS
28	90387–12N54	COLLAR	2					
29	1XD–23517–00	COVER, THRUST 1	4					
30	90105–12089	BOLT, FLANGE	2					
31	90185–12010	NUT, SELF-LOCKING	2					
32	1XD–F514A–01	RING, WHEEL 1	1					
33	92012–06012	BOLT, BUTTON HEAD	2					
34	1XD–F2342–00	PLATE, GUIDE 2	1					
35	92012–06012	BOLT, BUTTON HEAD	2					

FIG. 40 REAR BRAKE CALIPER

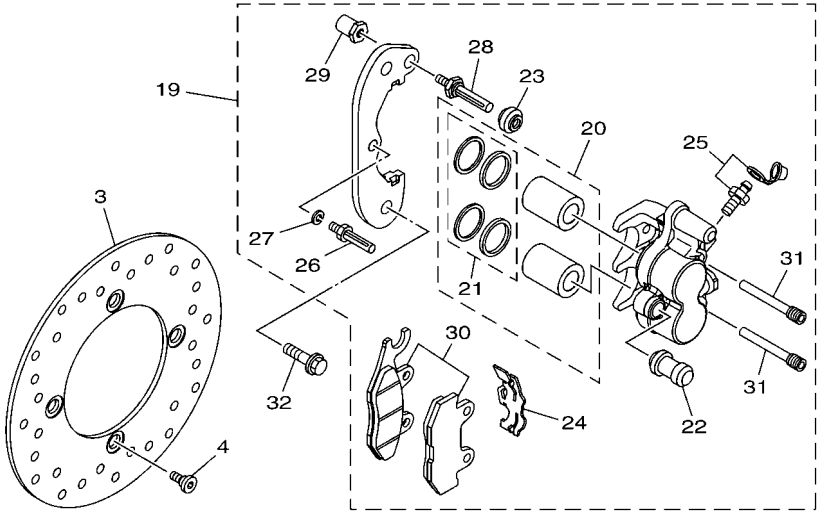

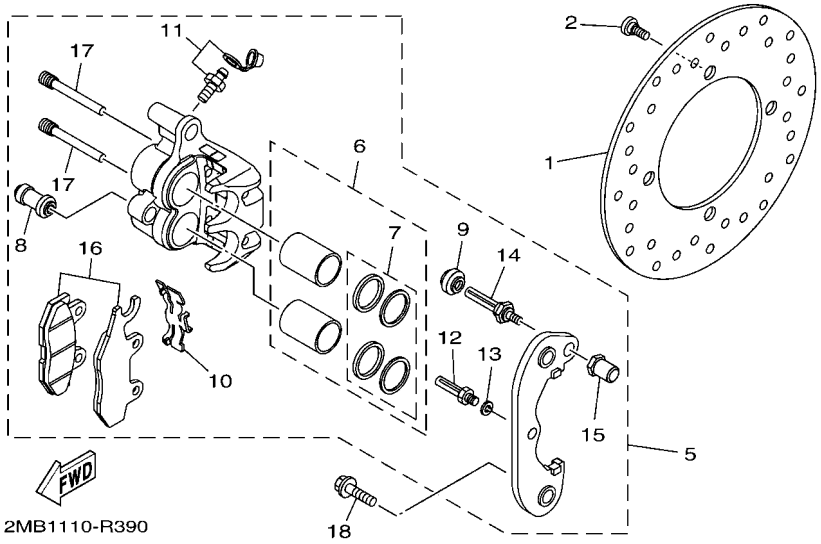

REF. NO.	PART NO.	DESCRIPTION	USA					REMARKS
1	2MB–F582T–00	DISC, BRAKE (LEFT)	1					
2	90109–08082	BOLT	4					
3	2MB–F582T–00	DISC, BRAKE (LEFT)	1					
4	90109–08082	BOLT	4					
5	1XD–2580V–00	CALIPER ASSY, REAR 1	1					
6	3LD–25802–00	.PISTON ASSY, CALIPER	1					
7	3JD–25803–00	..CALIPER SEAL KIT	1					
8	1UY–25937–51	.BOOT 2	1					
9	3JD–25917–00	.BOOT, CALIPER	1					
10	3LD–25934–01	.SPRING, PAD	1					
11	1UY–W0048–50	.BLEED SCREW KIT	1					
12	1UY–25926–51	.BOLT	1					
13	1UY–25938–51	.WASHER, SPRING	1					
14	3JD–25926–00	.BOLT	1					
15	3JD–25961–00	.NUT	1					
16	1XD–25806–00	.BRAKE PAD KIT 2	1					
17	3LD–25924–00	.PIN, PAD	2					
18	90105–10265	BOLT, FLANGE	2					
19	1XD–2580W–00	CALIPER ASSY, REAR 2	1					
20	3LD–25802–00	.PISTON ASSY, CALIPER	1					
21	3JD–25803–00	..CALIPER SEAL KIT	1					
22	1UY–25937–51	.BOOT 2	1					
23	3JD–25917–00	.BOOT, CALIPER	1					
24	3LD–25934–01	.SPRING, PAD	1					
25	1UY–W0048–50	.BLEED SCREW KIT	1					
26	1UY–25926–51	.BOLT	1					
27	1UY–25938–51	.WASHER, SPRING	1					

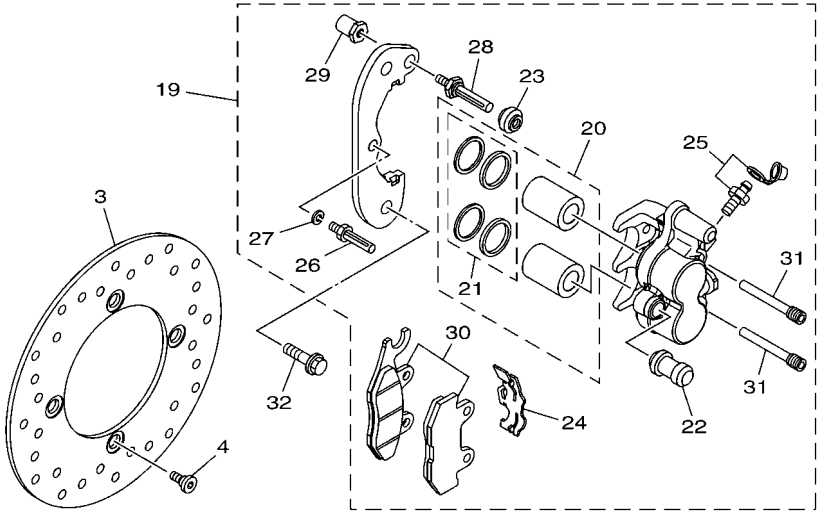

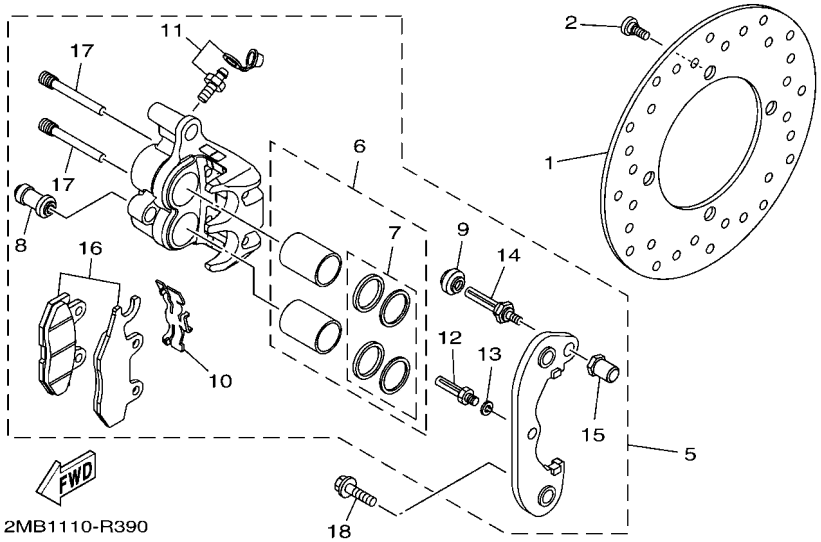

FIG. 40 REAR BRAKE CALIPER

REF. NO.	PART NO.	DESCRIPTION	USA					REMARKS
28	3JD–25926–00	.BOLT	1					
29	3JD–25961–00	.NUT	1					
30	1XD–25806–10	.BRAKE PAD KIT 2	1					
31	3LD–25924–00	.PIN, PAD	2					
32	90105–10265	BOLT, FLANGE	2					

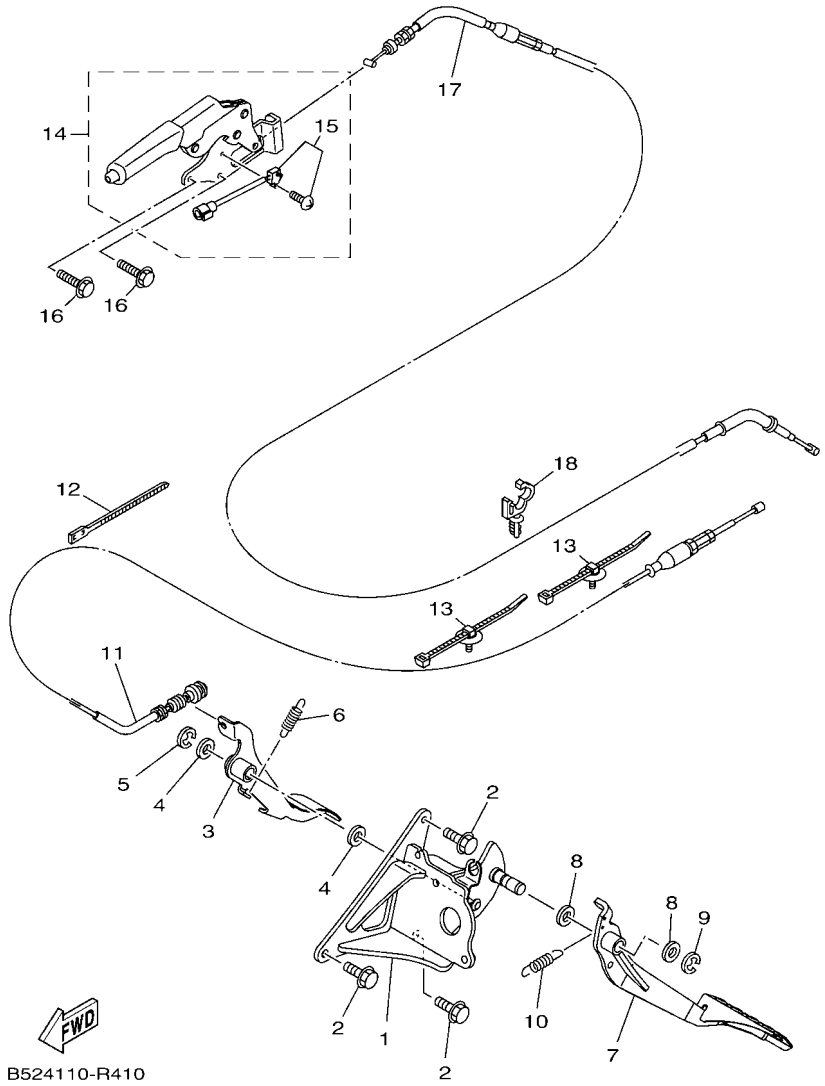

FIG. 41 PEDAL WIRE

REF. NO.	PART NO.	DESCRIPTION	USA					REMARKS
1	1XD–F2548–00	BRACKET, PEDAL SUPPORT	1					
2	95812–08016	BOLT, FLANGE	3					
3	1XD–F7801–00	ACCEL PEDAL ASSY	1					
4	90201–15018	WASHER, PLATE	2					
5	93430–12008	CIRCLIP	1					
6	90506–20192	SPRING, TENSION	1					
7	1XD–F7200–00	PEDAL, BRAKE	1					
8	90201–15018	WASHER, PLATE	2					
9	93430–12008	CIRCLIP	1					
10	90506–20192	SPRING, TENSION	1					
11	2MB–26311–00	CABLE, THROTTLE 1	1					
12	90464–40825	CLAMP	1					
13	5B4–F1338–00	CLAMP	2					
14	1XD–F5690–00	PARKING LEVER ASSY	1					
15	5UG–H251S–00	.SWITCH COMP.	1					
16	95812–06012	BOLT, FLANGE	2					
17	2MB–26341–00	WIRE, BRAKE 1	1					
18	90464–12830	CLAMP	1					d: 12mm

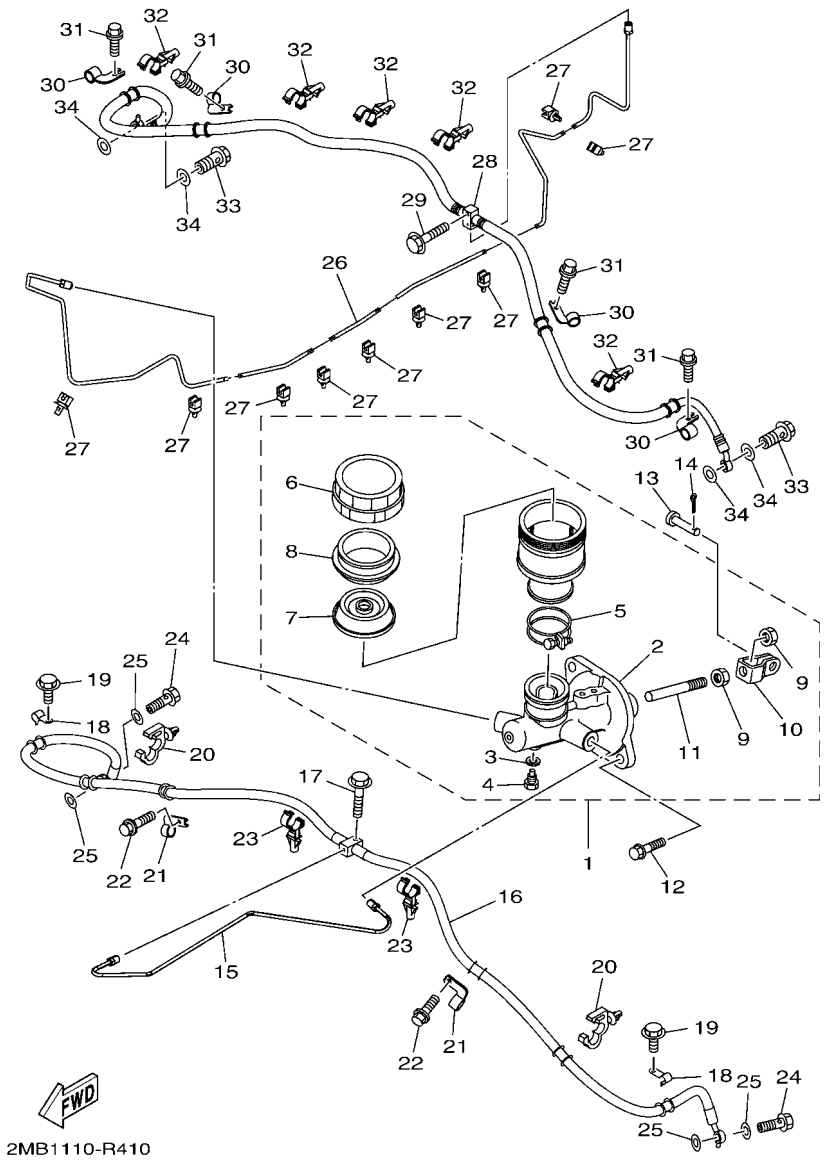

FIG. 42 MASTER CYLINDER

REF. NO.	PART NO.	DESCRIPTION	USA					REMARKS
1	2PG–2583T–00	MASTER CYLINDER ASSY	1					
2	5UG–25808–00	.CYLINDER KIT, MASTER	1					
3	5UG–25878–00	.WASHER, OIL BOLT	1					
4	5UG–25877–00	.BOLT, OIL 1	1					
5	5UG–25719–00	.BAND	1					
6	5UG–25852–00	.CAP, RESERVOIR	1					
7	5UG–25854–00	.DIAPHRAGM, RESERVOIR	1					
8	5UG–25855–00	.BUSH,DIAPHRAGM	1					
9	4SS–27218–00	.NUT	2					
10	2YK–27222–00	.JOINT	1					
11	5UG–25880–00	.PUSH ROD COMP.	1					
12	90105–08129	BOLT, FLANGE	2					
13	90240–08005	PIN, CLEVIS	1					
14	91402–20020	PIN, COTTER	1					
15	1XD–F5882–00	PIPE, BRAKE 2	1					
16	1XD–F5872–00	HOSE, BRAKE 1	1					
17	95812–06025	BOLT, FLANGE	1					
18	5KM–25875–00	HOLDER, BRAKE HOSE 1	2					
19	95812–06010	BOLT, FLANGE	2					
20	90464–18002	CLAMP	2					
21	2PG–25876–00	HOLDER, BRAKE HOSE 2	2					
22	95812–06010	BOLT, FLANGE	2					
23	90464–16012	CLAMP	2					
24	90401–10015	BOLT, UNION	2					
25	90201–10118	WASHER, PLATE	4					
26	2MB–F5871–00	PIPE, BRAKE	1					
27	5KM–81677–00	CLAMP 1	9					

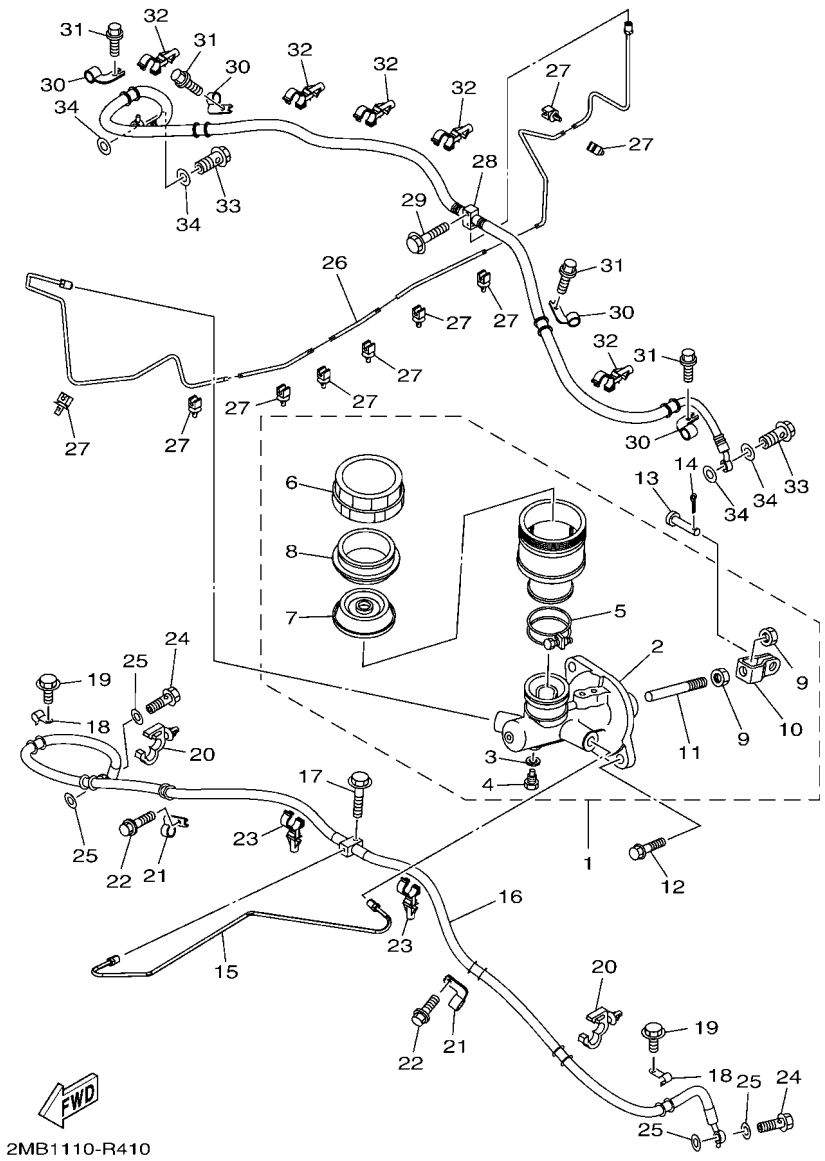

FIG. 42 MASTER CYLINDER

REF. NO.	PART NO.	DESCRIPTION	USA					REMARKS
28	2MB–F5873–00	HOSE, BRAKE 2	1					
29	90105–06833	BOLT, FLANGE	1					
30	2PG–25876–00	HOLDER, BRAKE HOSE 2	4					
31	95812–06010	BOLT, FLANGE	4					
32	90464–16012	CLAMP	5					
33	90401–10015	BOLT, UNION	2					
34	90201–10118	WASHER, PLATE	4					

FIG. 43 STAND & FOOTREST

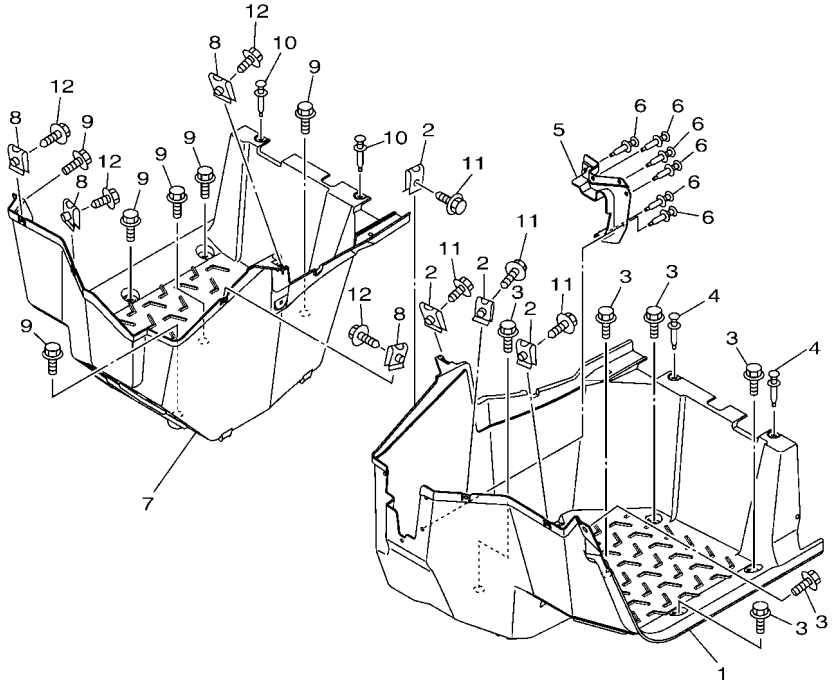

2MB1110-R420

REF. NO.	PART NO.	DESCRIPTION	USA					REMARKS
1	2MB–F7411–00	FOOTREST 1	1					
2	90183–060A6	NUT, SPRING	4					
3	JW1–K6179–01	BOLT, SPECIAL 1	6					
4	90269–07803	RIVET	3					
5	1XD–F7286–00	COVER, DUST	1					
6	90269–07803	RIVET	6					
7	2MB–F7421–00	FOOTREST 2	1					
8	90183–060A6	NUT, SPRING	4					
9	JW1–K6179–01	BOLT, SPECIAL 1	6					
10	90269–07803	RIVET	3					
11	90119–06226	BOLT, WITH WASHER	4					
12	90119–06226	BOLT, WITH WASHER	4					

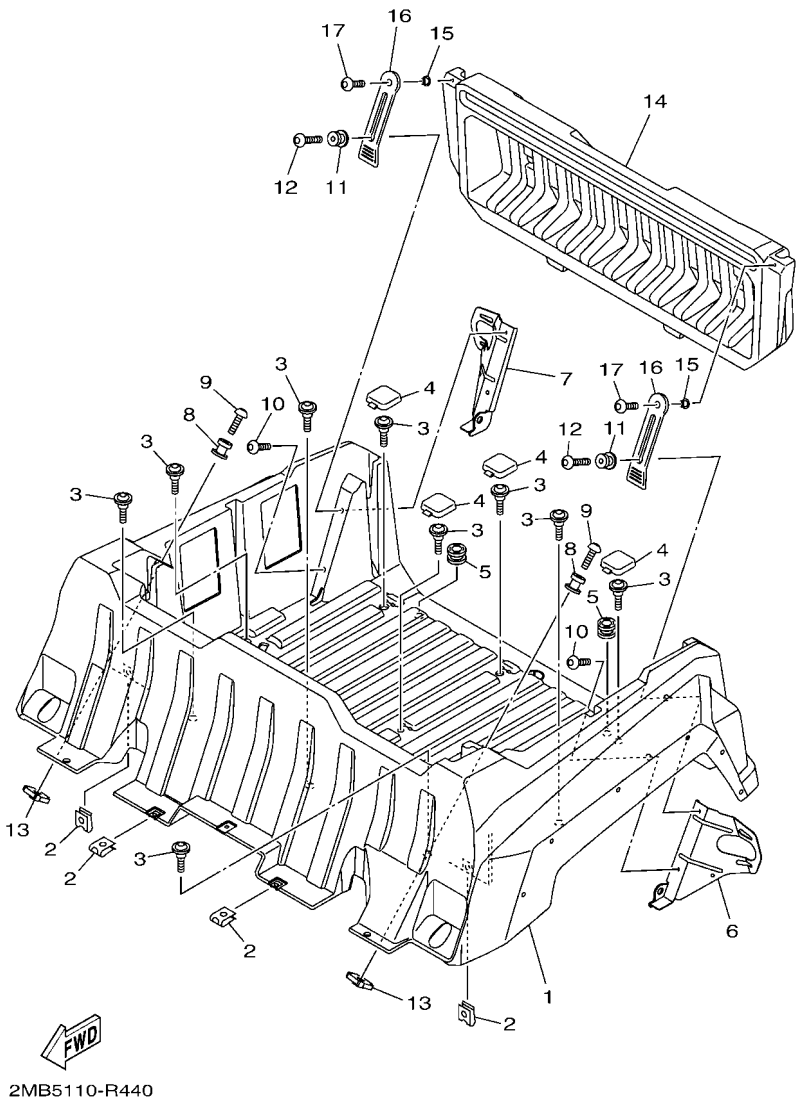

FIG. 44 CARRIER

REF. NO.	PART NO.	DESCRIPTION	USA					REMARKS
1	2MB–F1171–10	BOX	1					
2	90183–060A6	NUT, SPRING	4					
3	90109–068A5	BOLT	9					
4	2MB–F143A–00	CAP	4					
5	90480–13029	GROMMET	2					
6	2MB–F475U–00	BRACKET, TAIL COVER	1					
7	2MB–F475V–00	BRACKET, TAIL COVER 2	1					
8	8M6–77175–00	HOLDER, LATCH	2					
9	90111–06106	BOLT,HEX. SOCKET BUTTON	2					
10	90111–06123	BOLT,HEX. SOCKET BUTTON	2					
11	8M6–77175–00	HOLDER, LATCH	2					
12	90111–06106	BOLT,HEX. SOCKET BUTTON	2					
13	2MB–F1296–00	NUT	2					
14	2MB–K8365–00	CASE	1					
15	90387–06M89	COLLAR	2					
16	8V0–77171–00	BODY, LATCH 1	2					
17	90111–06123	BOLT,HEX. SOCKET BUTTON	2					

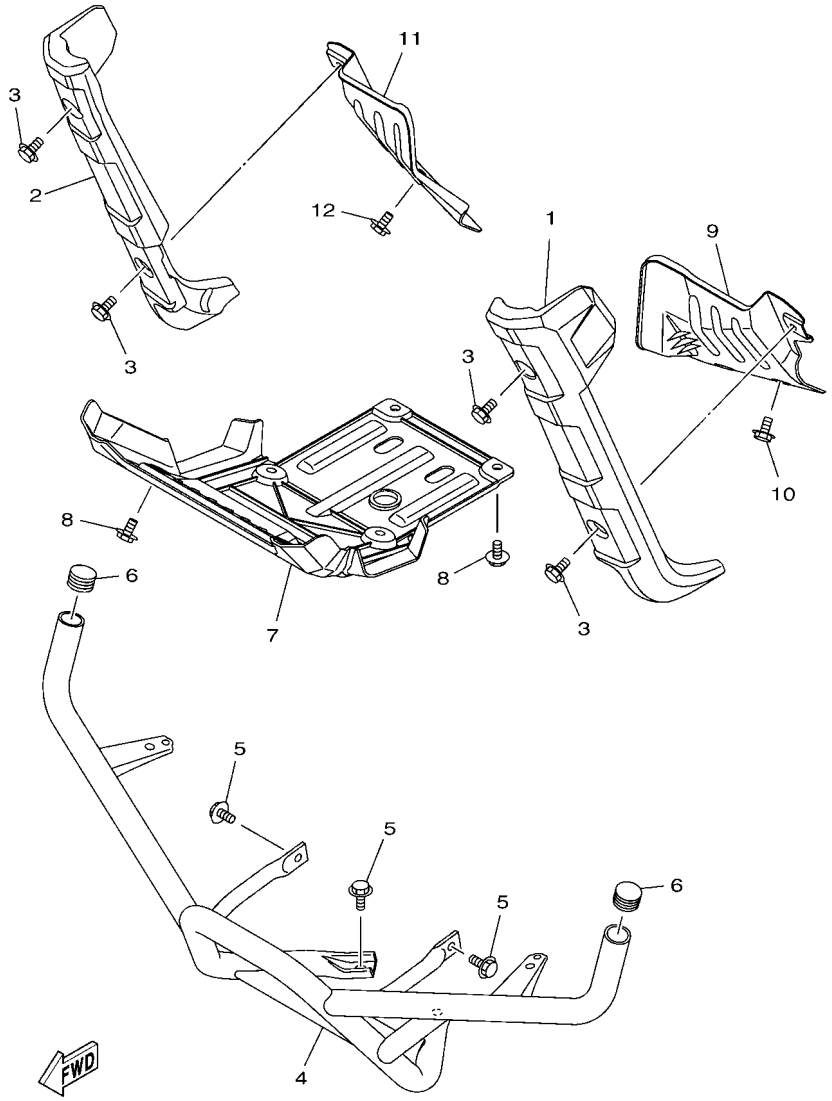

FIG. 45 GUARD

REF. NO.	PART NO.	DESCRIPTION	USA					REMARKS
1	2MB–K8185–00	EXTENSION, FRONT FENDER 1	1					
2	2MB–K8186–00	EXTENSION, FRONT FENDER 2	1					
3	90119–06226	BOLT, WITH WASHER	4					
4	2MB–F845N–00	BAR, CARRY FRONT	1					
5	95812–10016	BOLT, FLANGE	4					
6	5UG–F2417–00	PLUG	2					
7	2MB–F8385–00	COVER, UNDER	1					
8	90109–068A5	BOLT	6					
9	2MB–F840K–00	GUARD COMP.	1					
10	90109–06202	BOLT	2					
11	2MB–F840M–00	GUARD COMP. 2	1					
12	90109–06202	BOLT	2					

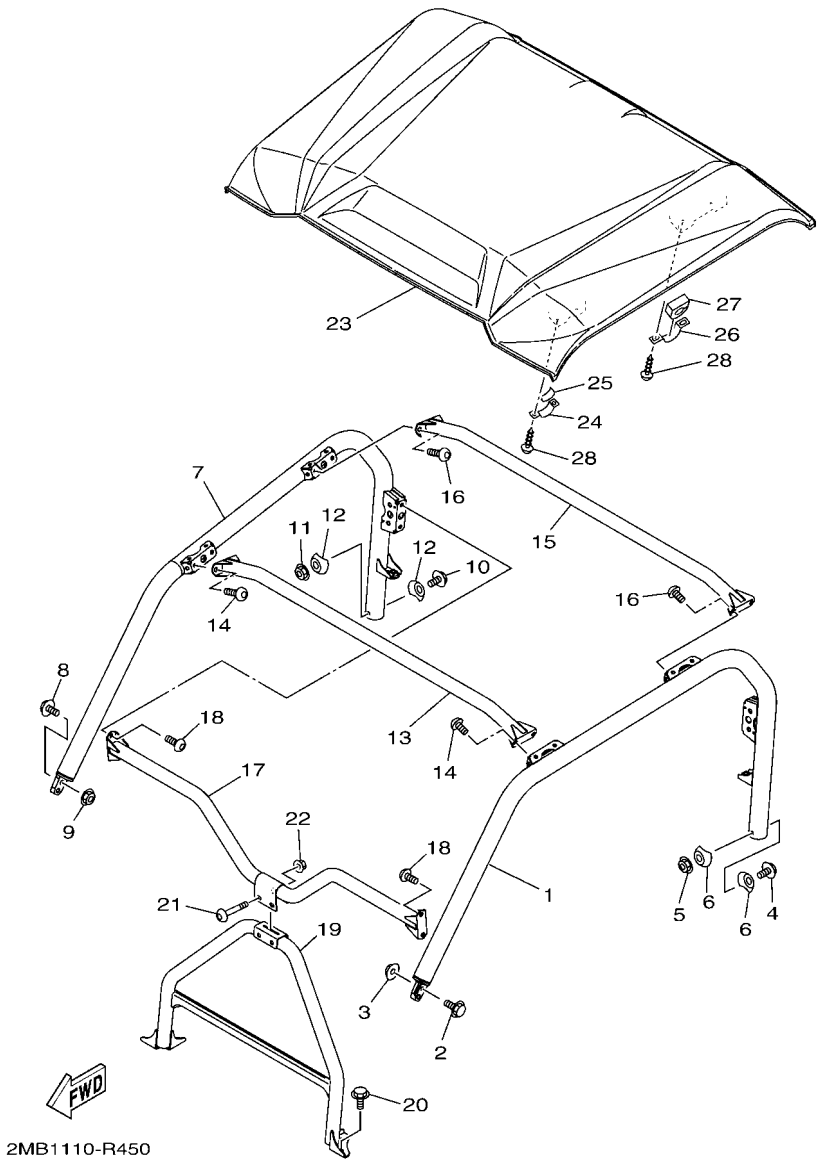

FIG. 46 GUARD 2

REF. NO.	PART NO.	DESCRIPTION	USA					REMARKS
1	1XD–K831A–00	SUPPORT, ROOF 3	1					
2	95812–10045	BOLT, FLANGE	2					
3	90185–10011	NUT, SELF-LOCKING	2					
4	92012–10070	BOLT, BUTTON HEAD	1					
5	90185–10011	NUT, SELF-LOCKING	1					
6	1XD–K7526–00	WASHER 2	2					
7	1XD–K831E–00	SUPPORT, ROOF 4	1					
8	95812–10045	BOLT, FLANGE	2					
9	90185–10011	NUT, SELF-LOCKING	2					
10	92012–10070	BOLT, BUTTON HEAD	1					
11	90185–10011	NUT, SELF-LOCKING	1					
12	1XD–K7526–00	WASHER 2	2					
13	2MB–K8392–00	MEMBER, ROOF FRAME	1					
14	90111–10802	BOLT,HEX. SOCKET BUTTON	4					
15	2MB–K8393–00	MEMBER, ROOF FRAME 2	1					
16	90111–10802	BOLT,HEX. SOCKET BUTTON	4					
17	2MB–K830A–00	ROOF SUPPORT ASSY 1	1					
18	90111–10802	BOLT,HEX. SOCKET BUTTON	4					
19	2MB–K830B–00	ROOF SUPPORT ASSY 2	1					
20	95812–10016	BOLT, FLANGE	4					
21	92012–10060	BOLT, BUTTON HEAD	2					
22	90185–10011	NUT, SELF-LOCKING	2					
23	2MB–K8314–00	COVER, SUN ROOF	1					
24	5UG–K8366–00	CLAMP, SUPPORT	4					
25	5UG–K7588–00	DAMPER	4					
26	1XP–K8366–00	CLAMP, SUPPORT	4					
27	1XP–K7588–00	DAMPER	4					

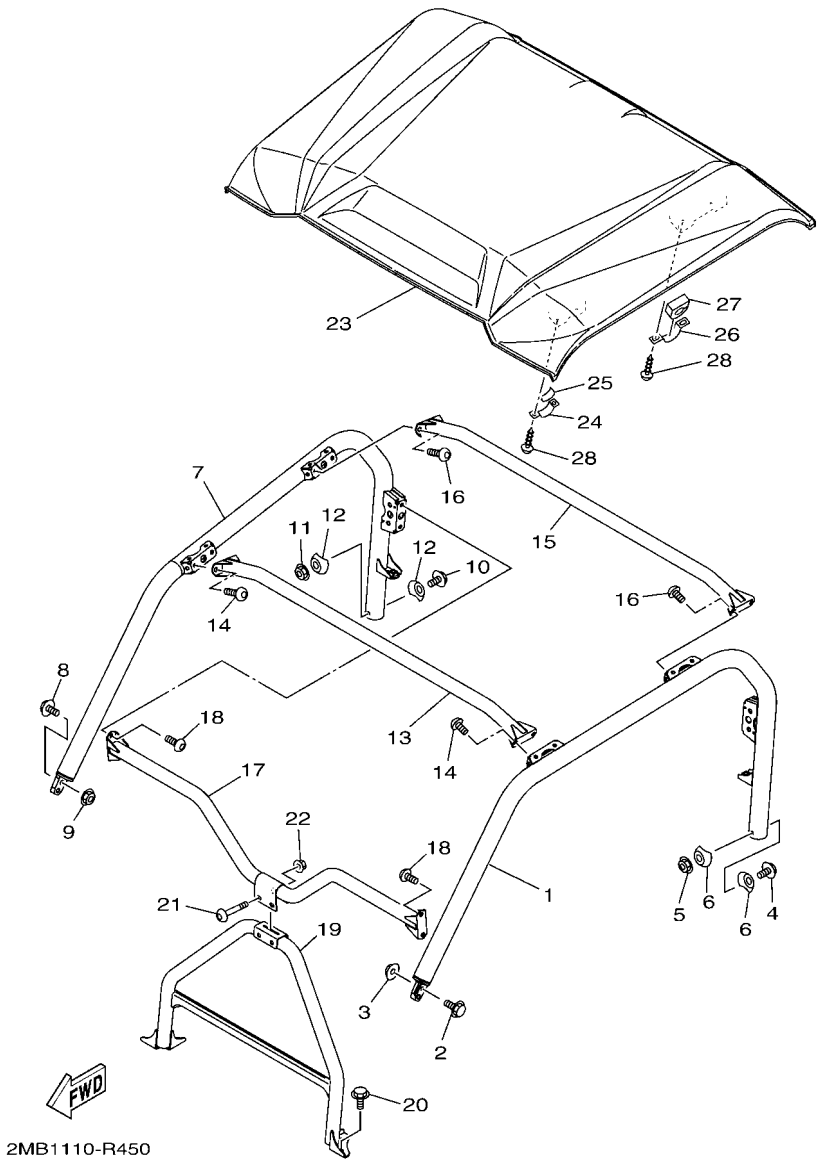

FIG. 46 GUARD 2

REF. NO.	PART NO.	DESCRIPTION	USA					REMARKS
28	90167–06800	SCREW, TAPPING	16					

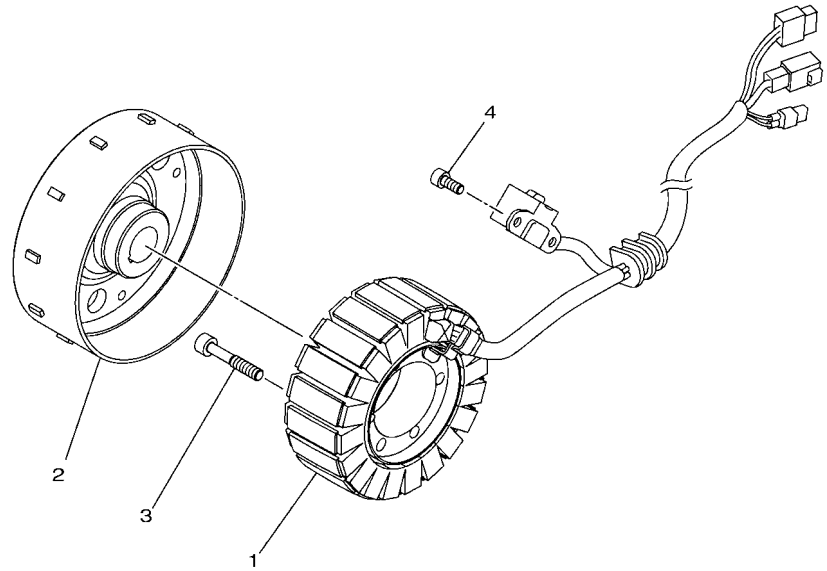

2MB1110-R460

FIG. 47 GENERATOR

REF. NO.	PART NO.	DESCRIPTION	USA					REMARKS
1	2MB–H1410–00	STATOR ASSY	1					
2	2MB–H1450–00	ROTOR ASSY	1					
3	2MB–E6777–20	BOLT	3					
4	2MB–E5187–00	BOLT	2					

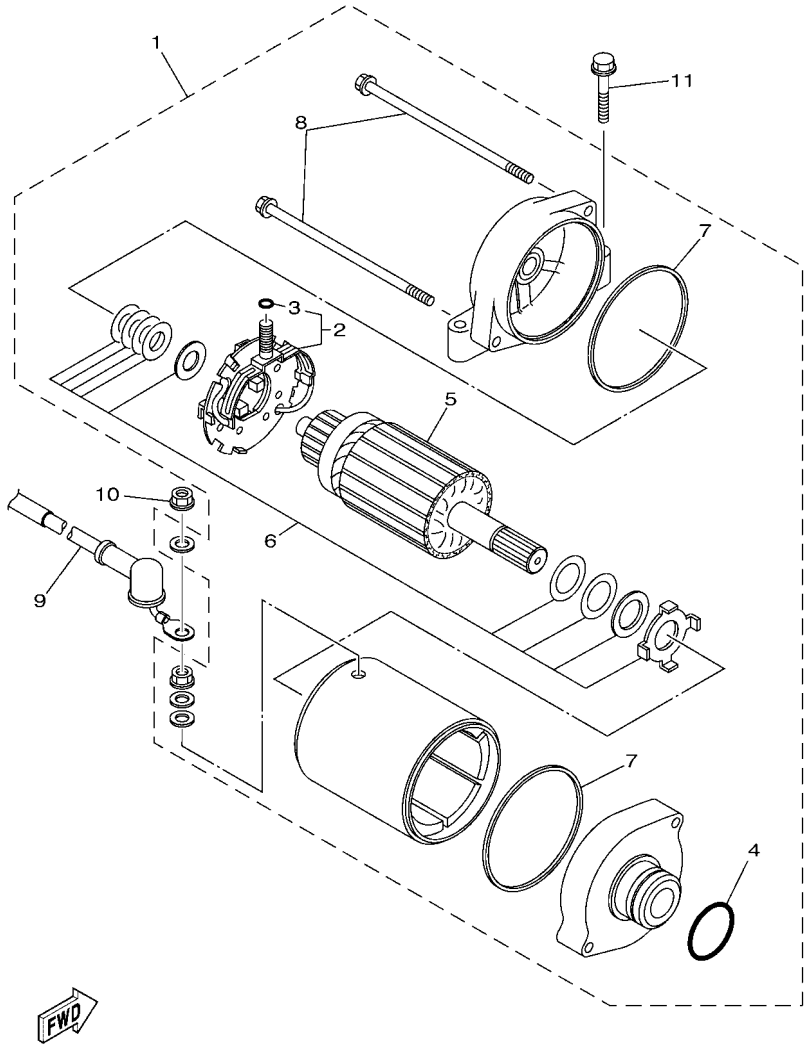

2MB1110-R470

FIG. 48 STARTING MOTOR

REF. NO.	PART NO.	DESCRIPTION	USA					REMARKS
1	2MB–H1890–00	MOTOR ASSY	1					
2	3AJ–81801–00	.BRUSH SET	1					
3	3TB–81847–00	..O-RING	1					
4	1FK–81847–00	.O-RING	1					
5	4NK–81850–00	.ARMATURE ASSY	1					
6	3KS–81809–00	.WASHER KIT	1					
7	11H–81844–00	.GASKET	2					
8	3AJ–81826–00	.BOLT	2					
9	2MB–H1815–00	CORD, STARTER MOTOR	1					
10	4XV–8182A–00	NUT	1					
11	2MB–E5481–50	BOLT 1	2					

FIG. 49 METER

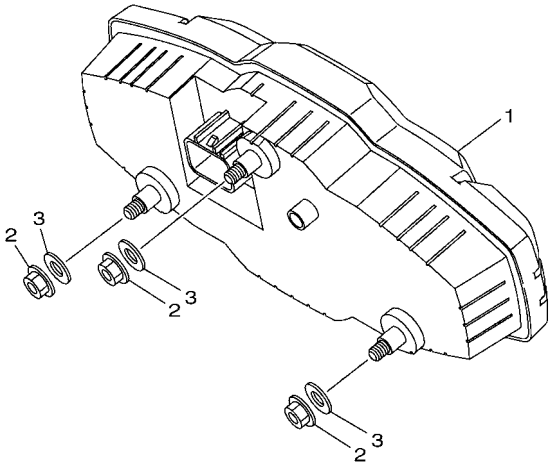

2US1110-P520

REF. NO.	PART NO.	DESCRIPTION	USA					REMARKS
1	2MB–83500–00	METER ASSY	1					
2	95602–05100	NUT, U	3					
3	90201–05N15	WASHER, PLATE	3					

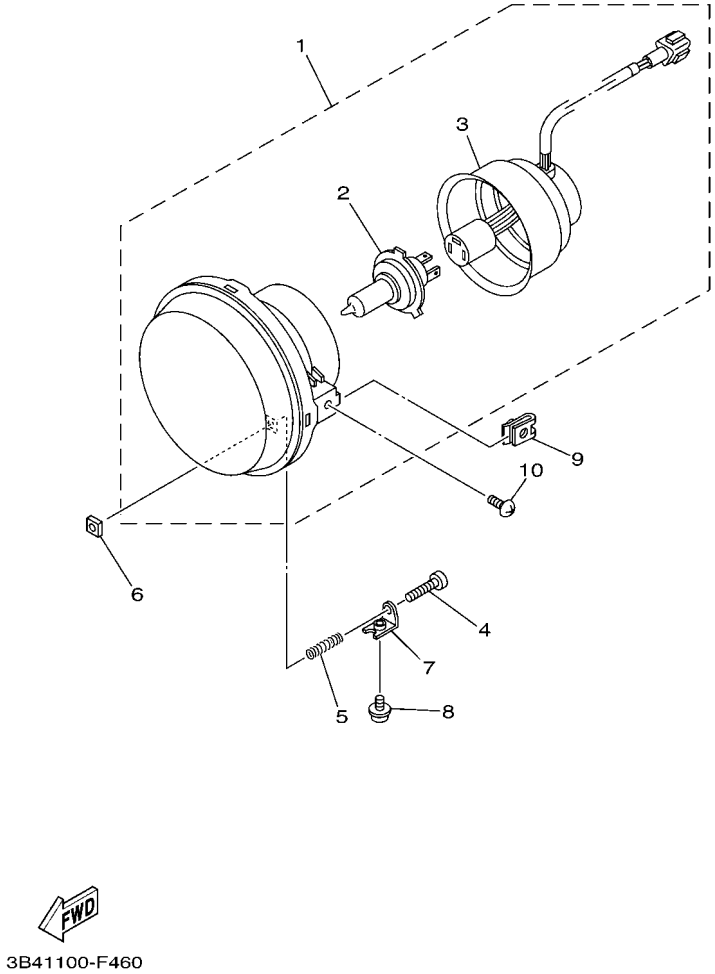

FIG. 50 HEADLIGHT

REF. NO.	PART NO.	DESCRIPTION	USA					REMARKS
1	28P–84300–00	HEADLIGHT ASSY	2					
2	28P–84314–00	.BULB, HEADLIGHT (12V 35/35W)	1					
3	3B4–84340–00	.SOCKET CORD ASSY 1	1					
4	98502–03530	SCREW, PAN HEAD	2					
5	90501–05764	SPRING, COMPRESSION	2					
6	2GU–84334–00	NUT, ADJUSTING	2					
7	5GH–84703–10	BRACKET	2					
8	90159–05044	SCREW, WITH WASHER	2					
9	90183–05008	NUT, SPRING	4					
10	90154–05021	SCREW, BINDING	4					

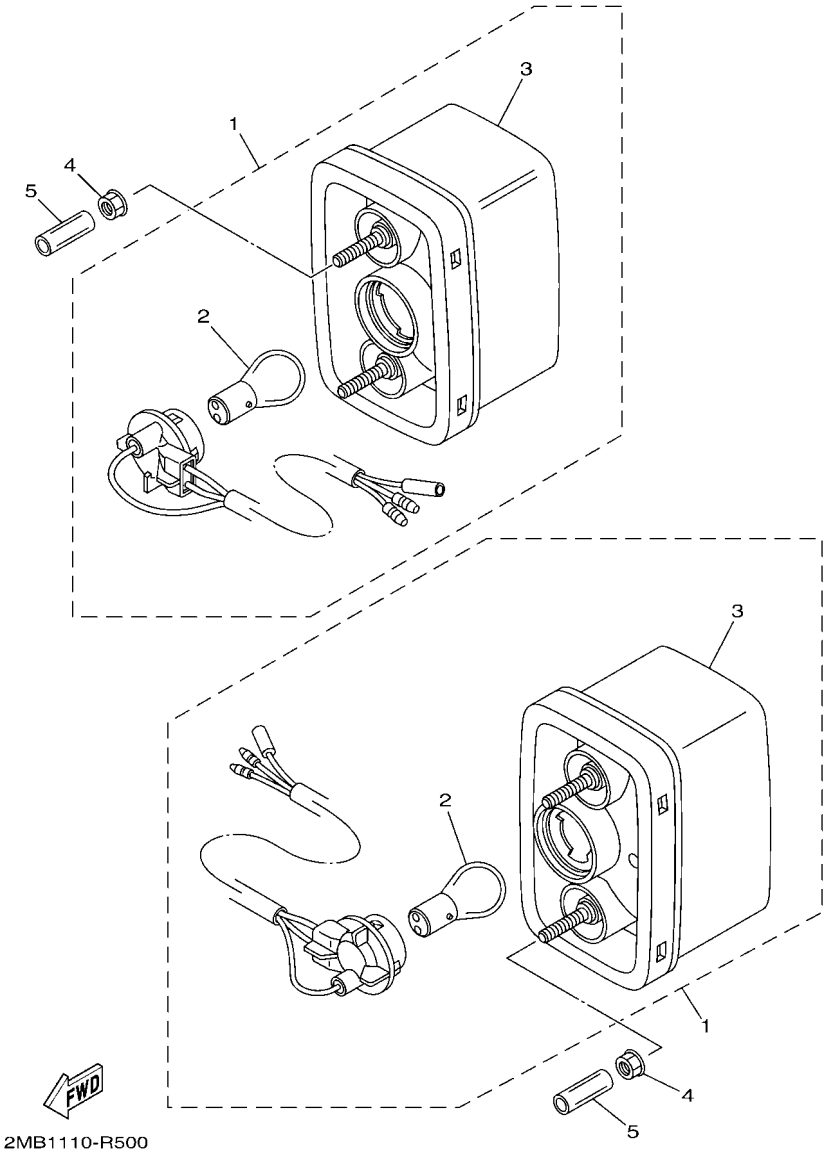

FIG. 51 TAILLIGHT

REF. NO.	PART NO.	DESCRIPTION	USA					REMARKS
1	5KM–84710–00	TAILLIGHT UNIT ASSY	2					
2	1A2–84714–41	.BULB (12V-21/5W)	1					
3	5KM–8472C–10	.LENS, TAILLIGHT	1					
4	95702–06300	NUT, NYLON	4					
5	90445–09220	HOSE (L30)	4					

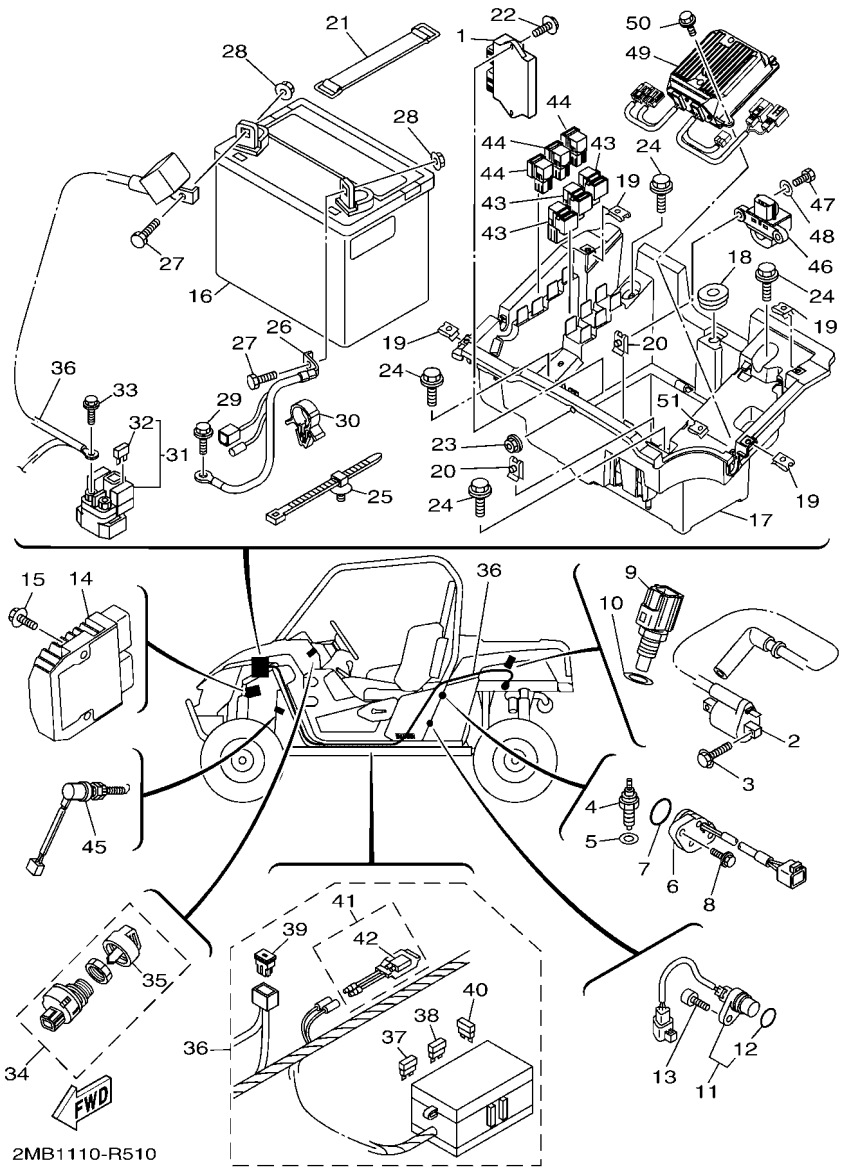

FIG. 52 ELECTRICAL 1

REF. NO.	PART NO.	DESCRIPTION	USA					REMARKS
1	2MB–8591A–10	ENGINE CONTROL UNIT ASSY	1					
2	2MB–82320–00	IGNITION COIL ASSY	1					
3	97002–06016	BOLT, HEXAGON	2					
4	2MB–H2540–00	NEUTRAL SWITCH ASSY	1					
5	2MB–E5384–00	GASKET	1					
6	2MB–H2540–10	NEUTRAL SWITCH ASSY	1					
7	2MB–E4D97–00	O-RING	1					
8	2MB–E5768–10	BOLT	2					
9	2MB–H5790–00	THERMOSENSOR ASSY	1					
10	2MB–E1195–00	GASKET	1					
11	2MB–H3755–00	SENSOR, SPEED	1					
12	4D9–81168–00	.O-RING	1					
13	2MB–E5481–10	BOLT 1	1					
14	1D7–81960–01	RECTIFIER & REGULATOR ASSY	1					
15	90105–06833	BOLT, FLANGE	2					
16	5UG–H2100–00	BATTERY ASSY (GS U1L-11)	1					
17	1XD–H212B–00	BOX, BATTERY 1	1					
18	90480–01558	GROMMET	1					
19	90183–060A6	NUT, SPRING	4					
20	90183–05008	NUT, SPRING	2					
21	3L8–82131–01	BAND, BATTERY	2					
22	95812–06020	BOLT, FLANGE	1					
23	95702–06500	NUT, FLANGE	1					
24	90119–06868	BOLT, WITH WASHER	4					
25	1NS–F1338–00	CLAMP	1					
26	2MB–H2116–00	WIRE, MINUS LEAD	1					
27	97080–08020	BOLT	2					

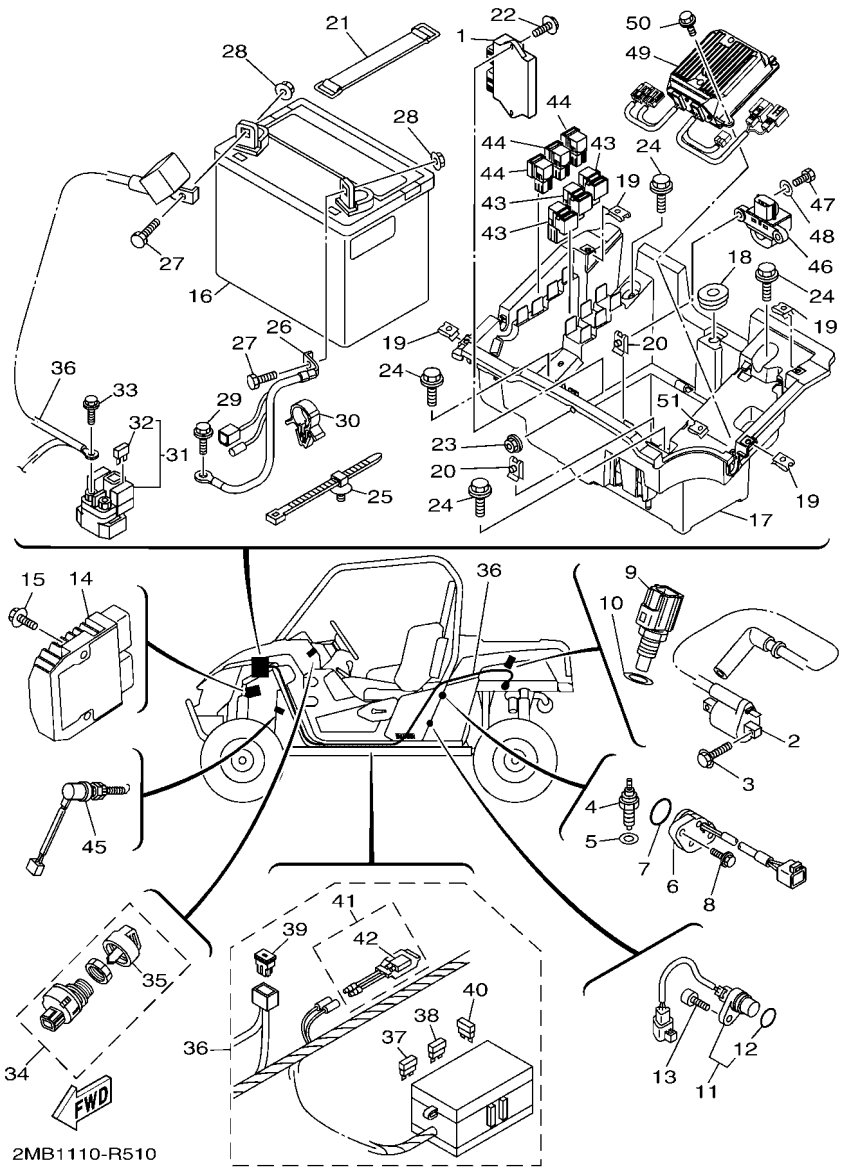

FIG. 52 ELECTRICAL 1

REF. NO.	PART NO.	DESCRIPTION	USA					REMARKS
28	90179–08015	NUT	2					
29	95812–06014	BOLT, FLANGE	1					
30	90464–15157	CLAMP	1					
31	5B4–81940–00	STARTER RELAY ASSY (RC19-080A)	1					
32	42X–82151–00	.FUSE (10A-BL)	2					
33	95022–06008	BOLT, FLANGE	2					
34	5UG–H2510–00	MAIN SWITCH ASSY	1					
35	5UG–H2579–00	.CAP, KEY	1					
36	2MB–82590–00	WIRE HARNESS ASSY	1					
37	5JJ–82151–10	.FUSE (15A-BL)	2					
38	5JJ–82151–30	.FUSE (10A-BL)	6					
39	5PS–82151–00	.FUSE (40A)	2					
40	5JJ–82151–70	.FUSE (25A-BL)	2					
41	5B4–82180–00	.CIRCUIT BREAKER ASSY	1					
42	5B4–82560–00	..THERMO SWITCH ASSY	1					
43	5DM–81950–00	RELAY ASSY (G8HN-1C4T-DJ-Y52)	3					
44	8DM–81950–11	RELAY ASSY (8DM-11)	3					
45	4KB–82530–10	STOP SWITCH ASSY	1					
46	3B4–82576–00	SENSOR, LEAN ANGLE	1					
47	97002–05016	BOLT	2					
48	92902–05600	WASHER, PLATE	2					
49	1XP–859A0–00	POWER STRG. CONT. UNIT ASSY	1					
50	95812–06016	BOLT, FLANGE	1					
51	90183–060A6	NUT, SPRING	1					

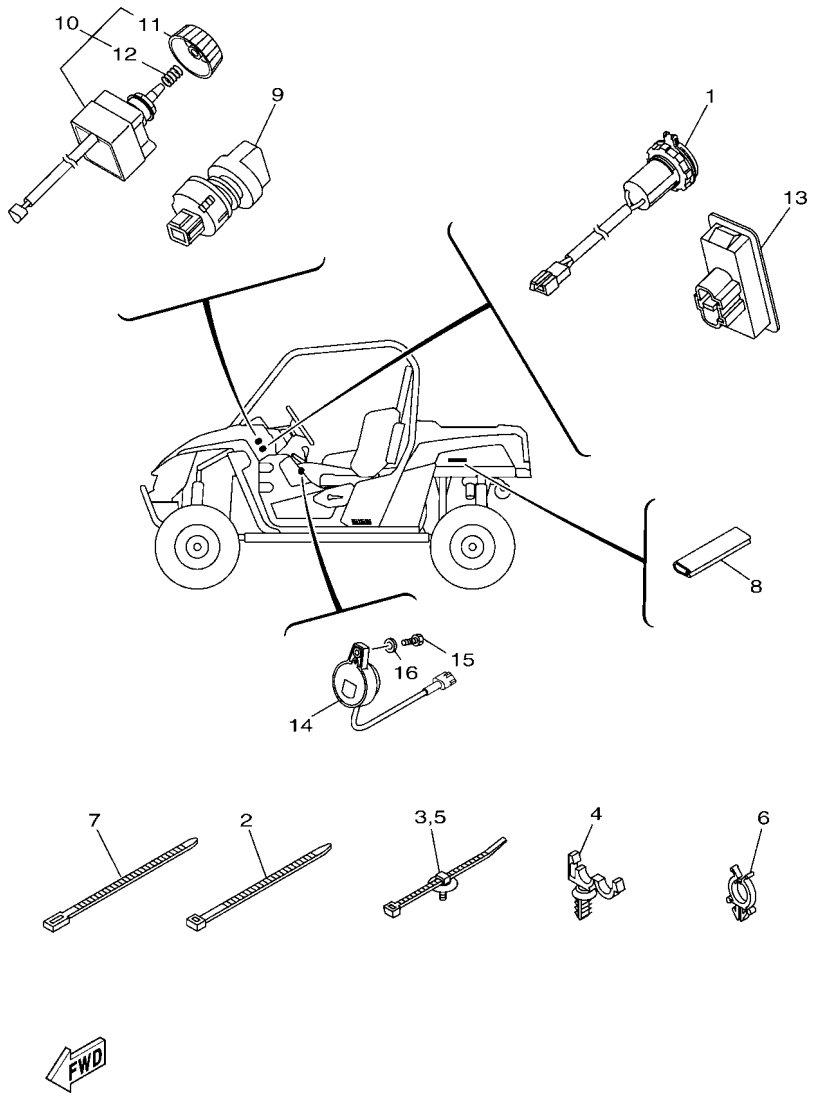

FIG. 53 ELECTRICAL 2

REF. NO.	PART NO.	DESCRIPTION	USA					REMARKS
1	1HP–H254B–10	TERMINAL COMP.	1					
2	90464–48800	CLAMP	4					
3	5B4–F1338–00	CLAMP	11					
4	90464–12830	CLAMP	10					d: 12mm
5	1NS–F1338–00	CLAMP	5					
6	90464–25826	CLAMP	1					
7	90464–29179	CLAMP	1					
8	4XY–28347–00	MOLE 3	1					
9	5UG–H2526–00	SWITCH, LAMP	1					
10	1XD–87280–00	SWITCH, SELECT	1					
11	1XD–87285–00	.KNOB, SELECT SWITCH	1					
12	1XD–87288–00	.SPRING	1					
13	1XD–H3530–00	PILOT LIGHT ASSY	1					
14	2MB–83383–00	BUZZER	1					
15	97002–05020	BOLT	1					
16	92902–05600	WASHER, PLATE	1					

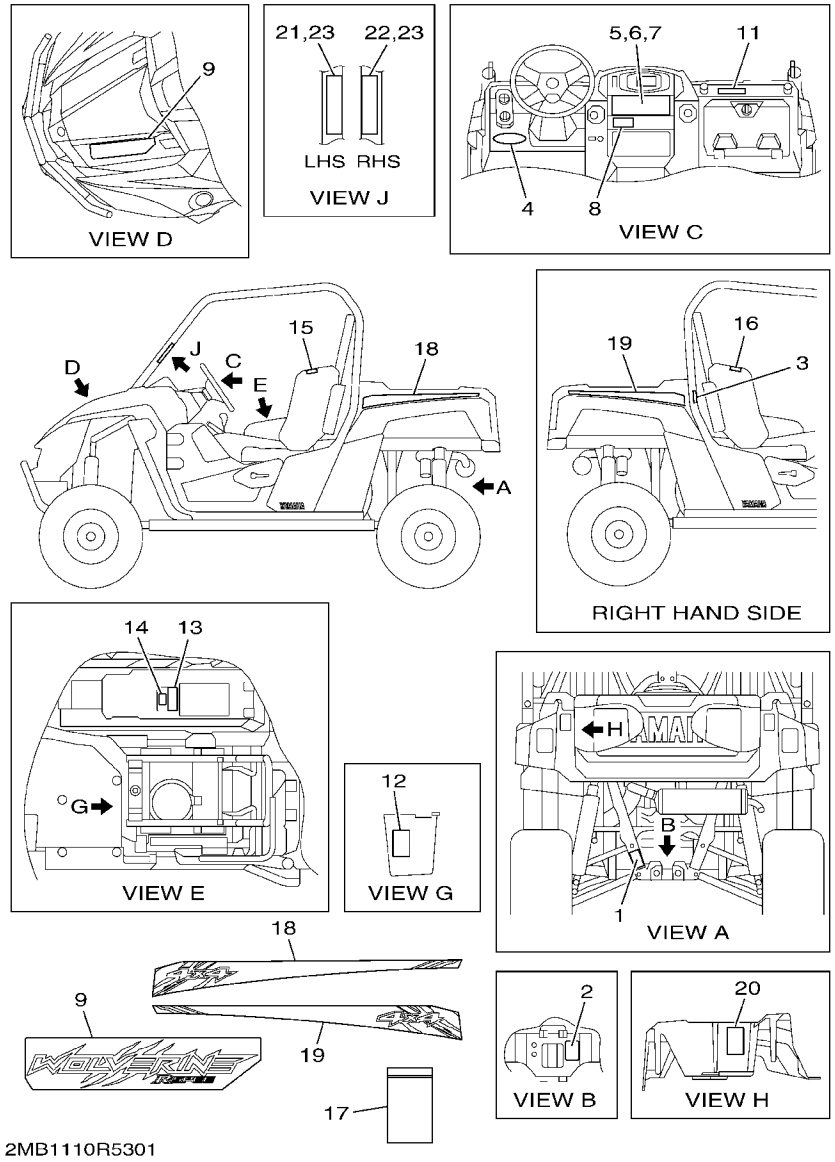

FIG. 54 EMBLEM & LABEL 1

REF. NO.	PART NO.	DESCRIPTION	USA					REMARKS
1	1XD–F151K–00	LABEL 7	1					ENGLISH
2	5UG–F151J–00	LABEL 6	1					
3	1XD–F4164–00	EMBLEM 4	1					ENGLISH
4	1XP–F1783–10	EMBLEM 3	1					
5	2MB–F1568–00	LABEL, WARNING	1					ENGLISH
6	4XE–F1539–10	RIVET	4					
7	4XE–F1549–00	WASHER, FENDER MOLD	4					
8	1XD–F1558–00	LABEL, WARNING 2	1					ENGLISH
9	2MB–F1781–11	EMBLEM 1	1					
11	1XD–F8446–00	LABEL, CAUTION	1					ENGLISH
12	2MB–F1696–00	LABEL, CAUTION	1					ENGLISH
13	2MB–F151F–00	LABEL 3	1					ENGLISH
14	2MB–F3819–00	EMBLEM	1					
15	1XD–K8483–00	LABEL WARNING	1					ENGLISH
16	1XD–K8483–00	LABEL WARNING	1					ENGLISH
17	1P0–F8186–01	POUCH	1					
18	2MB–F163G–20	EMBLEM 1	1					
19	2MB–F163H–20	EMBLEM 2	1					
20	2MB–F4897–00	EMBLEM	1					ENGLISH
21	1XD–K7761–00	LABEL, WARNING 1	1					ENGLISH
22	1XD–K7762–00	LABEL, WARNING 2	1					ENGLISH
23	4XE–F1539–10	RIVET	4					

PART NO.	REF. NO.
214–11198–01	28 – 33
1XD–13160–00	11 – 16
8FP–13556–00	11 – 7
2MB–13750–00	11 – 1
1XD–13761–00	11 – 14
3B4–13907–10	32 – 6
2MB–13971–00	32 – 1
1XD–14147–00	11 – 15
5LP–14147–00	11 – 3
1UY–14155–00	11 – 12
1S3–14161–00	11 – 2
2C0–14216–00	11 – 8
8CC–14216–10	11 – 5
5UG–14293–00	11 – 10
3B4–14424–00	10 – 15
59V–14457–00	10 – 25
	10 – 34
5YP–14562–00	11 – 13
3EG–14613–00	12 – 16
2MB–14737–00	12 – 12
3B4–14759–01	12 – 14
2MB–14840–00	1 – 24
2MB–17530–00	18 – 9
5B4–17556–00	28 – 53
3B4–17611–00	16 – 27
3B4–17623–02	16 – 19
4WV–17644–00	16 – 37
1XD–17660–00	16 – 30
4CW–17664–00	16 – 34
2PG–17670–00	16 – 31
4WV–17684–00	16 – 36
2MB–18104–00	20 – 9
2MB–18115–00	20 – 19
2H9–18154–00	20 – 28
1KT–18157–00	20 – 27
2MB–18173–00	20 – 29
28P–18174–00	20 – 31
2PG–21485–00	21 – 3
1XD–2175K–10	22 – 32
1AA–21815–00	7 – 23
1AA–21874–00	7 – 24
5KM–22149–10	26 – 11
	30 – 16
1XD–23517–00	38 – 29
	39 – 29
1XD–23579–00	30 – 3
	30 – 7
	35 – 23

PART NO.	REF. NO.
1XD–23579–00	36 – 23
2MB–23810–00	31 – 20
2MB–23813–00	31 – 21
5B4–23841–00	31 – 15
2MB–2384L–00	31 – 24
16B–2385L–10	29 – 9
16B–2385M–10	29 – 10
2MB–238B0–00	31 – 22
28P–24380–00	32 – 27
1S3–24486–00	32 – 8
3B4–24491–00	32 – 7
2P5–24610–00	32 – 10
3B4–2512J–00	35 – 15
	36 – 15
3B4–25182–00	35 – 16
	36 – 16
5UG–25719–00	42 – 5
1XD–25802–00	37 – 7
	37 – 20
3LD–25802–00	40 – 6
	40 – 20
1XD–25803–00	37 – 8
	37 – 21
3JD–25803–00	40 – 7
	40 – 21
1XD–25805–00	37 – 17
1XD–25805–10	37 – 30
1XD–25806–00	40 – 16
1XD–25806–10	40 – 30
5UG–25808–00	42 – 2
1XD–2580T–00	37 – 6
1XD–2580U–00	37 – 19
1XD–2580V–00	40 – 5
1XD–2580W–00	40 – 19
2PG–2583T–00	42 – 1
5UG–25852–00	42 – 6
5UG–25854–00	42 – 7
5UG–25855–00	42 – 8
5KM–25875–00	42 – 18
2PG–25876–00	42 – 21
	42 – 30
5UG–25877–00	42 – 4
5UG–25878–00	42 – 3
5UG–25880–00	42 – 11
3JD–25917–00	37 – 10
	37 – 23
	40 – 9
	40 – 23

PART NO.	REF. NO.
1XD–25919–00	37 – 11
	37 – 24
1XD–25919–00	40 – 17
	40 – 31
3JD–25926–00	37 – 15
	37 – 28
	40 – 14
	40 – 28
1UY–25926–51	37 – 13
	37 – 26
	40 – 12
	40 – 26
3TB–25933–00	37 – 18
	37 – 31
3LD–25934–01	40 – 10
	40 – 24
1UY–25937–51	37 – 9
	37 – 22
	40 – 8
	40 – 22
1UY–25938–51	37 – 14
	37 – 27
	40 – 13
	40 – 27
3JD–25961–00	37 – 16
	37 – 29
	40 – 15
	40 – 29
2MB–26311–00	41 – 11
2MB–26341–00	41 – 17
4SS–27218–00	42 – 9
2YK–27222–00	42 – 10
4XY–28347–00	53 – 8
3B4–28349–00	22 – 28
	22 – 30
1XD–2837G–00	22 – 8
1XD–2837H–00	22 – 9
1XD–4581J–00	28 – 52
2MB–46106–00	28 – 49
2HC–46107–00	28 – 26
2MB–46109–00	28 – 36
1XD–46114–00	28 – 24
3B4–46117–00	28 – 7
3B4–46117–10	28 – 7
3B4–46117–20	28 – 7
3B4–46117–30	28 – 7
5KM–46126–00	27 – 56
3B4–46134–00	28 – 11

PART NO.	REF. NO.
3B4–46135–00	28 – 12
5GT–46136–00	28 – 38
5KM–46136–00	27 – 60
5KM–46137–00	27 – 59
	28 – 48
1XD–4613F–00	28 – 61
1XD–46141–00	28 – 4
3B4–46142–00	28 – 23
4WV–46145–10	28 – 17
4S1–46146–00	28 – 5
1XD–46160–00	28 – 1
1XD–46161–00	28 – 3
1XD–46162–00	28 – 2
3B4–46163–00	28 – 14
3B4–46164–00	28 – 9
3B4–46166–00	28 – 10
1HP–4616A–00	28 – 16
1XD–46173–00	28 – 47
5GT–46187–00	28 – 29
	28 – 56
5GH–46293–00	28 – 19
1XD–46470–00	28 – 6
5KM–46559–00	27 – 58
3B4–47359–00	28 – 15
8V0–77171–00	44 – 16
8M6–77175–00	44 – 8
	44 – 11
JR4–7825N–00	25 – 4
4D9–81168–00	52 – 12
5KM–81677–00	42 – 27
3AJ–81801–00	48 – 2
3KS–81809–00	48 – 6
3AJ–81826–00	48 – 8
4XV–8182A–00	48 – 10
11H–81844–00	48 – 7
1FK–81847–00	48 – 4
3TB–81847–00	48 – 3
4NK–81850–00	48 – 5
5B4–81940–00	52 – 31
5DM–81950–00	52 – 43
8DM–81950–11	52 – 44
1D7–81960–01	52 – 14
3L8–82131–01	52 – 21
42X–82151–00	52 – 32
5PS–82151–00	52 – 39
5JJ–82151–10	52 – 37
5JJ–82151–30	52 – 38
5JJ–82151–70	52 – 40

PART NO.	REF. NO.
5B4–82180–00	52 – 41
2MB–82320–00	52 – 2
5S7–82380–00	11 – 9
4KB–82530–10	52 – 45
5B4–82560–00	52 – 42
3B4–82576–00	52 – 46
2MB–82590–00	52 – 36
2MB–83383–00	53 – 14
2MB–83500–00	49 – 1
28P–84300–00	50 – 1
28P–84314–00	50 – 2
2GU–84334–00	50 – 6
3B4–84340–00	50 – 3
5GH–84703–10	50 – 7
5KM–84710–00	51 – 1
1A2–84714–41	51 – 2
5KM–8472C–10	51 – 3
3B4–85885–00	11 – 6
8FP–85886–00	10 – 23
2MB–8591A–10	52 – 1
1XP–859A0–00	52 – 49
1XD–87280–00	53 – 10
1XD–87285–00	53 – 11
1XD–87288–00	53 – 12
2MB–E1102–00	1 – 1
2MB–E111G–00	1 – 11
2MB–E1133–10	1 – 2
2MB–E1160–00	1 – 13
2MB–E1166–00	1 – 17
2MB–E1179–00	1 – 3
2MB–E1181–00	1 – 5
2MB–E1191–00	1 – 8
2MB–E1193–00	1 – 12
1CT–E1195–00	27 – 9
2MB–E1195–00	8 – 29
	52 – 10
2MB–E1198–00	8 – 4
	19 – 16
2MB–E119C–00	1 – 7
2MB–E1311–00	2 – 3
2MB–E131B–00	1 – 16
2MB–E1351–00	2 – 4
2MB–E1361–00	1 – 6
2MB–E1387–00	6 – 5
2MB–E1388–00	10 – 2
2MB–E1400–00	3 – 1
2MB–E1412–10	3 – 2
2MB–E1415–00	3 – 6

PART NO.	REF. NO.
2MB–E1422–10	3 – 3
2MB–E1425–00	3 – 13
1XD–E1428–00	27 – 17
2MB–E1428–00	17 – 10
1XD–E1429–00	27 – 28
2MB–E1429–00	17 – 23
2MB–E142A–00	17 – 24
2MB–E142B–00	17 – 28
2MB–E1436–00	3 – 24
2MB–E1446–00	3 – 4
2MB–E1447–00	3 – 19
2MB–E1456–00	8 – 21
2MB–E1459–00	3 – 22
	8 – 20
2MB–E1483–00	3 – 23
1CT–E1486–00	27 – 50
1XD–E1486–00	27 – 21
2MB–E1500–00	3 – 20
2MB–E1536–00	3 – 8
2MB–E1545–00	3 – 10
2MB–E1555–00	3 – 12
1CT–E1557–00	27 – 16
2MB–E1557–00	3 – 11
2MB–E1558–00	16 – 25
2MB–E1603–00	3 – 15
2MB–E1604–00	3 – 15
2MB–E1605–00	3 – 15
2MB–E1631–00	3 – 14
2MB–E1633–00	3 – 16
2MB–E1634–00	3 – 17
2MB–E1635–00	3 – 14
2MB–E1636–00	3 – 14
2MB–E1651–10	3 – 7
2MB–E1681–10	3 – 5
2MB–E1813–00	16 – 24
2MB–E1982–00	27 – 34
2MB–E2111–00	4 – 1
2MB–E2113–00	4 – 4
2MB–E2117–00	4 – 5
2MB–E2118–00	4 – 6
2MB–E2119–00	4 – 7
2MB–E2121–00	4 – 2
2MB–E2126–00	4 – 3
2MB–E2129–00	4 – 8
2MB–E2153–00	4 – 10
2MB–E2157–00	27 – 24
1XD–E2157–10	27 – 12
2MB–E2168–A0	4 – 9

PART NO.	REF. NO.
2MB–E2168–F0	4 – 9
2MB–E2168–H0	4 – 9
2MB–E2168–K0	4 – 9
2MB–E2168–L0	4 – 9
2MB–E2168–M0	4 – 9
2MB–E2168–N0	4 – 9
2MB–E2168–R0	4 – 9
2MB–E2168–T0	4 – 9
2MB–E2168–U0	4 – 9
2MB–E2168–V0	4 – 9
2MB–E2168–W0	4 – 9
2MB–E2168–X0	4 – 9
2MB–E2168–Y0	4 – 9
2MB–E2169–00	4 – 9
2MB–E2169–10	4 – 9
2MB–E2169–20	4 – 9
2MB–E2169–30	4 – 9
2MB–E2169–40	4 – 9
2MB–E2169–50	4 – 9
2MB–E2169–60	4 – 9
2MB–E2169–70	4 – 9
2MB–E2169–80	4 – 9
2MB–E2169–90	4 – 9
2MB–E2169–A0	4 – 9
2MB–E2169–E0	4 – 9
2MB–E2169–G0	4 – 9
2MB–E2169–J0	4 – 9
2MB–E2169–L0	4 – 9
2MB–E2170–00	5 – 1
2MB–E2176–00	5 – 3
2MB–E2177–00	5 – 6
2MB–E2179–00	5 – 2
	5 – 5
2MB–E217A–00	5 – 10
2MB–E2180–01	5 – 4
2MB–E2190–00	5 – 12
2MB–E21E2–00	5 – 17
2MB–E2210–00	5 – 13
2MB–E2213–00	5 – 14
2MB–E2221–00	8 – 15
1XD–E2228–00	27 – 2
2MB–E2241–00	1 – 9
2MB–E2251–00	5 – 18
2MB–E2252–00	5 – 19
2MB–E2279–00	14 – 40
2MB–E2284–00	5 – 8
2MB–E2287–01	5 – 9
1CT–E2289–10	27 – 41

PART NO.	REF. NO.
1CT–E22A1–00	27 – 49
2MB–E22A1–00	18 – 8
1XD–E2405–00	7 – 16
2MB–E2411–00	7 – 1
2MB–E2413–00	7 – 2
2MB–E2422–00	6 – 12
2MB–E2428–00	6 – 14
2MB–E2435–00	6 – 16
	7 – 3
2MB–E2438–00	14 – 5
2MB–E2439–00	6 – 3
	13 – 12
2MB–E243A–01	9 – 7
2MB–E243F–00	6 – 4
2MB–E243K–00	14 – 3
2MB–E243M–00	6 – 11
1XD–E2443–00	7 – 31
2MB–E244H–00	14 – 6
2MB–E2451–00	6 – 9
2MB–E2458–00	6 – 10
1XD–E2461–00	7 – 15
1XD–E2462–00	7 – 18
2MB–E2469–00	6 – 6
2MB–E2481–00	6 – 1
2MB–E2483–00	7 – 11
2MB–E2489–00	8 – 11
2MB–E2518–00	7 – 20
2MB–E2551–01	9 – 14
1XD–E2576–00	7 – 6
1XD–E2577–00	7 – 7
2MB–E2577–01	9 – 8
2MB–E2578–00	7 – 8
1XD–E2579–00	7 – 9
2MB–E2615–00	18 – 19
2MB–E261G–00	20 – 15
2MB–E2623–00	13 – 9
1XD–E2675–00	7 – 17
2MB–E2842–00	5 – 11
2MB–E2843–00	6 – 8
2MB–E2858–00	8 – 34
2MB–E3016–00	8 – 12
1CT–E3147–00	27 – 52
2MB–E3161–00	8 – 33
2MB–E3165–00	8 – 23
2MB–E3166–00	8 – 28
2MB–E316F–00	8 – 25
2MB–E3171–00	8 – 22
2MB–E3177–00	8 – 10

PART NO.	REF. NO.
2MB–E3181–00	8 – 26
2MB–E319C–00	8 – 13
2MB–E319C–00	27 – 13
2MB–E3300–00	8 – 1
2MB–E3354–00	3 – 21
2MB–E3355–00	8 – 19
1CT–E3362–00	27 – 10
	27 – 31
2MB–E3405–01	9 – 11
2MB–E3416–00	8 – 17
2MB–E3418–00	8 – 18
2MB–E3440–00	8 – 5
2MB–E3455–00	8 – 32
2MB–E3461–00	8 – 7
2MB–E3469–00	8 – 31
2MB–E3473–00	16 – 22
2MB–E3476–00	8 – 35
1NS–E3480–00	9 – 3
2MB–E3484–00	8 – 9
2MB–E3487–00	14 – 33
2MB–E3497–00	8 – 8
2MB–E3573–00	8 – 6
2MB–E3574–00	21 – 5
2MB–E3586–00	10 – 1
2MB–E3610–00	1 – 15
2MB–E3691–00	9 – 16
2MB–E4005–00	14 – 22
1CT–E4005–10	27 – 46
1XD–E4410–02	10 – 10
1XD–E4411–01	10 – 11
1XD–E4412–01	10 – 16
1XD–E4417–00	10 – 20
1XD–E441B–00	10 – 21
1XD–E4429–00	10 – 22
1XD–E4431–00	10 – 8
2PG–E443A–00	10 – 32
2MB–E4446–00	1 – 10
1XD–E4451–00	10 – 19
1XD–E4452–00	10 – 17
1XD–E4453–00	10 – 6
1XD–E4458–00	10 – 12
1XD–E4462–01	10 – 13
1XD–E4463–00	10 – 9
1XD–E4467–00	10 – 14
1XD–E4472–00	10 – 18
2MB–E4476–00	10 – 30
2MB–E4611–00	12 – 1
2MB–E4710–00	12 – 4

PART NO.	REF. NO.
2MB–E4714–00	12 – 2
1XD–E4745–00	12 – 9
2MB–E4755–00	12 – 6
2BG–E4780–00	12 – 5
2MB–E4793–00	12 – 10
2MB–E4814–00	17 – 33
2MB–E482K–00	1 – 19
1XD–E4881–00	1 – 23
1XD–E4882–00	1 – 25
2MB–E4889–00	1 – 21
2MB–E4890–00	1 – 20
2MB–E4D97–00	52 – 7
2MB–E4G97–00	14 – 15
2MB–E5100–01	13 – 1
2MB–E5112–00	13 – 11
2MB–E5113–00	14 – 10
2MB–E511A–00	14 – 4
1XD–E511B–00	27 – 8
2MB–E511B–00	16 – 4
2MB–E511C–00	14 – 13
2MB–E5163–00	16 – 2
2MB–E5167–00	13 – 2
2MB–E5168–00	14 – 12
2MB–E5169–00	14 – 14
2MB–E5175–00	13 – 3
2MB–E5179–00	14 – 7
2MB–E5181–00	14 – 25
	16 – 13
2MB–E5182–00	2 – 2
	2 – 6
2MB–E5184–00	13 – 5
	13 – 16
2MB–E5187–00	14 – 11
	47 – 4
2MB–E5315–00	14 – 18
2MB–E5351–00	14 – 31
2MB–E5362–01	13 – 10
2MB–E5365–00	14 – 30
1CT–E5371–00	27 – 7
2MB–E5379–00	14 – 29
2MB–E5381–00	14 – 23
2MB–E5383–00	18 – 3
2MB–E5384–00	52 – 5
2MB–E5388–00	13 – 14
2MB–E5409–00	14 – 1
2MB–E5421–00	14 – 16
2MB–E5431–00	14 – 28
2MB–E5451–00	14 – 8

PART NO.	REF. NO.
2MB–E5453–00	14 – 17
2MB–E5463–00	16 – 12
1XD–E5472–00	14 – 46
2MB–E5473–00	14 – 39
2MB–E5474–00	14 – 37
2MB–E5477–00	14 – 34
2MB–E547B–01	14 – 38
2MB–E5480–00	14 – 20
2MB–E5481–00	5 – 16
2MB–E5481–10	7 – 5
	13 – 15
	20 – 14
	52 – 13
2MB–E5481–20	1 – 14
	2 – 1
	2 – 5
	5 – 15
	6 – 7
2MB–E5481–30	8 – 2
	16 – 15
2MB–E5481–40	8 – 16
2MB–E5481–50	13 – 6
	14 – 9
	16 – 14
	48 – 11
2MB–E5481–60	6 – 2
	6 – 15
	7 – 4
	13 – 13
2MB–E5481–70	6 – 17
2MB–E5481–80	1 – 4
2MB–E5481–90	13 – 8
2MB–E5481–A0	21 – 7
2MB–E5481–B0	6 – 13
2MB–E5481–C0	13 – 7
2MB–E5481–E0	8 – 14
2MB–E5482–00	5 – 20
	14 – 24
2MB–E5482–10	14 – 19
	14 – 26
2MB–E5482–20	20 – 6
2MB–E5482–30	14 – 27
2MB–E5485–00	8 – 27
2MB–E5512–00	15 – 5
2MB–E5515–00	15 – 1
2MB–E5517–01	15 – 3
2MB–E5521–00	15 – 4
2MB–E5522–00	15 – 2

PART NO.	REF. NO.
2MB–E5590–00	15 – 6
2MB–E5596–00	14 – 2
2MB–E5597–00	19 – 10
2MB–E5693–00	14 – 21
2MB–E5744–00	16 – 6
2MB–E5768–00	14 – 32
2MB–E5768–10	52 – 8
2MB–E6134–00	16 – 11
2MB–E6181–00	3 – 18
1CT–E6377–00	27 – 18
2MB–E6611–00	16 – 1
2MB–E6620–00	16 – 10
2MB–E662A–00	17 – 12
	17 – 17
	17 – 32
2MB–E6642–00	16 – 3
2MB–E6647–00	18 – 17
	18 – 25
2MB–E6664–00	16 – 8
2MB–E6717–00	16 – 9
2MB–E6777–00	15 – 7
2MB–E6777–10	1 – 22
2MB–E6777–20	47 – 3
2MB–E6819–00	16 – 5
1CT–E7051–00	27 – 48
1XD–E7051–00	27 – 27
2MB–E7058–00	18 – 16
	18 – 24
2MB–E7059–00	17 – 27
2MB–E7116–00	17 – 9
2MB–E7126–00	17 – 16
2MB–E7136–00	17 – 19
2MB–E7154–00	17 – 22
2MB–E7156–00	17 – 2
2MB–E7158–00	17 – 4
2MB–E7166–00	17 – 3
2MB–E7168–00	17 – 8
2MB–E7223–00	17 – 20
2MB–E7233–00	17 – 15
2MB–E7243–00	17 – 26
2MB–E7253–00	17 – 11
2MB–E7258–00	17 – 14
2MB–E7268–00	17 – 21
2MB–E7278–00	17 – 29
2MB–E7285–00	17 – 18
2MB–E7412–00	18 – 2
2MB–E7413–00	18 – 11
2MB–E7417–50	18 – 6

PART NO.	REF. NO.
2MB–E7417–60	18 – 6
2MB–E7417–70	18 – 6
2MB–E7417–80	18 – 6
2MB–E7417–90	18 – 6
2MB–E7417–A0	18 – 6
2MB–E7417–B0	18 – 6
2MB–E7421–00	17 – 7
2MB–E7422–00	18 – 13
2MB–E7423–00	18 – 22
2MB–E7432–00	17 – 25
2MB–E7463–00	18 – 7
2MB–E7499–00	18 – 14
	18 – 27
2MB–E7521–00	18 – 1
2MB–E7523–00	17 – 30
2MB–E7531–00	18 – 20
2MB–E7531–10	18 – 20
2MB–E7531–20	18 – 20
2MB–E7531–30	18 – 20
2MB–E7531–40	18 – 20
2MB–E7531–50	18 – 20
2MB–E7531–60	18 – 20
2MB–E7551–00	18 – 10
2MB–E7582–00	17 – 13
2MB–E7583–00	17 – 31
2MB–E7589–00	18 – 12
2MB–E7606–00	16 – 16
2MB–E761A–00	18 – 21
2MB–E7632–00	16 – 18
2MB–E7639–00	16 – 23
2MB–E7641–00	16 – 26
2MB–E7642–00	18 – 26
2MB–E7645–00	16 – 21
2MB–E7648–00	16 – 28
2MB–E7653–00	16 – 20
2MB–E7658–00	18 – 5
2MB–E765G–00	18 – 4
2MB–E7668–00	16 – 29
	16 – 39
2MB–E7678–00	16 – 7
2MB–E7681–00	17 – 1
2MB–E76F3–00	17 – 6
2MB–E76F4–00	18 – 18
2MB–E76F5–00	17 – 5
2MB–E76G3–00	20 – 11
2MB–E7832–00	18 – 15
	18 – 23
2MB–E8103–00	20 – 8

PART NO.	REF. NO.
2MB–E8119–00	19 – 13
2MB–E8123–00	19 – 9
1HP–E8125–00	20 – 25
2MB–E8137–00	20 – 3
2MB–E8138–00	20 – 5
2MB–E8143–00	19 – 12
2MB–E8146–00	20 – 13
2MB–E8149–00	8 – 3
	19 – 15
1HP–E8154–00	20 – 35
2MB–E8169–00	20 – 23
1XD–E8172–00	20 – 33
2MB–E8183–00	20 – 4
1XD–E8190–10	20 – 22
2MB–E8191–00	20 – 7
1HP–E8196–00	20 – 26
2MB–E8198–00	20 – 1
2MB–E8218–00	8 – 30
	19 – 11
2MB–E8222–00	19 – 2
2MB–E8363–00	8 – 24
	19 – 14
2MB–E8380–00	20 – 10
2MB–E8413–00	20 – 2
2MB–E8438–00	20 – 16
2MB–E8511–00	19 – 6
2MB–E8512–00	19 – 7
2MB–E8531–00	19 – 8
2MB–E8540–00	19 – 1
2MB–E8542–00	19 – 3
2MB–E8563–00	19 – 5
2MB–E8566–00	19 – 4
2MB–E8581–00	13 – 4
2MB–E8582–00	20 – 12
2MB–F1110–00	21 – 1
2MB–F1159–00	21 – 14
2MB–F1171–10	44 – 1
2MB–F117A–00	21 – 12
1XD–F1208–00	31 – 8
2MB–F1296–00	44 – 13
1NS–F1338–00	7 – 10
	52 – 25
	53 – 5
5B4–F1338–00	41 – 13
	53 – 3
1XD–F139T–00	22 – 2
2MB–F1428–00	27 – 35
2MB–F143A–00	44 – 4

PART NO.	REF. NO.
1XD–F146A–00	24 – 11
	24 – 25
1XD–F146A–00	21 – 2
2MB–F1498–00	9 – 1
2MB–F1510–00	22 – 19
1XD–F1515–00	22 – 5
1XD–F1516–00	22 – 7
2MB–F151F–00	54 – 13
5UG–F151J–00	54 – 2
1XD–F151K–00	54 – 1
4XE–F1539–10	54 – 6
	54 – 23
4XE–F1549–00	54 – 7
2MB–F1551–00	23 – 1
2MB–F1555–00	23 – 2
1XD–F1558–00	54 – 8
2MB–F1559–00	23 – 5
2MB–F1560–00	23 – 6
2MB–F1568–00	54 – 5
1XD–F160F–00	22 – 4
1XD–F163A–00	22 – 26
2MB–F163G–20	54 – 18
2MB–F163H–20	54 – 19
2MB–F1653–00	25 – 3
2MB–F1696–00	54 – 12
2MB–F1721–00	24 – 1
5B4–F1722–00	24 – 19
	24 – 34
2MB–F1731–00	24 – 4
2MB–F1753–00	27 – 15
1XD–F175B–01	22 – 14
2MB–F177J–00	25 – 5
2MB–F1781–11	54 – 9
1XP–F1783–10	54 – 4
1XD–F178K–00	31 – 11
1XD–F1797–00	24 – 9
	24 – 23
1XD–F1871–00	7 – 22
2MB–F197A–00	22 – 31
1XD–F197K–00	24 – 8
	24 – 22
1XD–F1981–00	27 – 67
2MB–F1986–00	21 – 20
2MB–F198J–00	21 – 18
2MB–F2171–00	26 – 1
2MB–F2172–00	26 – 3
2MB–F217M–00	26 – 5
2MB–F217N–00	26 – 7

PART NO.	REF. NO.
2MB–F220T–00	29 – 1
2MB–F220U–00	29 – 3
1HP–F2259–01	29 – 2
	29 – 4
	30 – 20
	30 – 22
2MB–F2327–00	25 – 12
2MB–F2328–00	25 – 15
1XD–F2341–00	38 – 34
1XD–F2342–00	39 – 34
5UG–F2417–00	45 – 6
1XD–F2548–00	41 – 1
2MB–F287G–00	21 – 10
2MB–F2898–00	21 – 24
1XD–F311F–00	34 – 6
2MB–F3123–00	30 – 25
2MB–F3133–00	30 – 26
2MB–F3145–00	16 – 17
1XD–F3165–00	31 – 12
16B–F3394–01	34 – 12
1XD–F3400–00	31 – 1
1XD–F3447–00	31 – 13
1XD–F3489–00	31 – 9
1XD–F3501–00	35 – 19
1XD–F3502–00	36 – 19
2MB–F350A–00	30 – 19
2MB–F350B–00	30 – 21
1HP–F3526–00	26 – 2
	26 – 4
	26 – 6
	26 – 8
	30 – 2
	30 – 6
	30 – 10
	30 – 12
1XD–F3540–00	30 – 1
1XD–F3550–00	30 – 5
2MB–F3570–00	30 – 9
2MB–F3580–00	30 – 11
1XD–F3818–00	31 – 31
2MB–F3819–00	54 – 14
2PG–F3833–00	31 – 16
16B–F3838–00	31 – 28
2MB–F3840–00	31 – 17
1XD–F3844–00	31 – 3
1XD–F386G–00	29 – 13
1XD–F386H–00	29 – 14
2MB–F3872–00	27 – 33

PART NO.	REF. NO.
1XD–F387F–00	31 – 6
1XD–F387G–00	31 – 4
1XD–F387J–00	31 – 7
1XD–F387K–00	31 – 5
1XD–F38G0–00	31 – 2
1XD–F38H0–00	31 – 10
1XD–F4110–00	32 – 5
2MB–F4157–00	32 – 24
B42–F4163–00	54 – 10
1XD–F4164–00	54 – 3
2MB–F4181–00	32 – 23
2MB–F4182–00	32 – 26
2MB–F4291–00	32 – 21
1XD–F463G–00	24 – 12
	24 – 26
1XD–F467K–00	34 – 4
1XD–F4700–00	33 – 3
	33 – 14
2MB–F470J–00	34 – 1
1XD–F470L–00	34 – 9
2PG–F470R–00	34 – 7
2PG–F470R–10	34 – 8
2MB–F4711–00	33 – 2
	33 – 13
1XD–F4723–00	33 – 5
	33 – 16
1XD–F4731–00	33 – 4
	33 – 15
2PG–F4739–00	33 – 7
	33 – 18
1XD–F473C–00	33 – 6
1XD–F473D–00	33 – 17
1XD–F4742–00	33 – 8
	33 – 19
2MB–F475U–00	44 – 6
2MB–F475V–00	44 – 7
1XD–F475X–00	33 – 9
	33 – 21
2MB–F476L–00	27 – 44
2MB–F4790–00	33 – 1
	33 – 12
2MB–F4897–00	54 – 20
2MB–F510D–00	35 – 25
	36 – 25
	38 – 4
	39 – 4
1XD–F510U–00	38 – 15
	39 – 15

PART NO.	REF. NO.
5UG–F510U–00	35 – 13
	36 – 13
1XD–F511G–00	35 – 12
	36 – 12
	38 – 13
	39 – 13
1XD–F511H–00	35 – 11
	36 – 11
	38 – 12
	39 – 12
2MB–F512A–00	35 – 5
	36 – 5
	38 – 21
	39 – 21
1XD–F512G–00	38 – 14
	39 – 14
1XD–F512G–10	35 – 14
	36 – 14
5UG–F512H–00	35 – 17
	36 – 17
	38 – 17
	39 – 17
1XD–F512J–00	38 – 16
	39 – 16
1XD–F514A–01	35 – 29
	36 – 29
	38 – 32
	39 – 32
1XD–F5180–00	35 – 1
	36 – 1
1XD–F518F–00	35 – 6
	36 – 6
1XD–F530F–10	38 – 22
1XD–F530T–00	38 – 8
	39 – 8
1XD–F530T–10	35 – 7
	36 – 7
1XD–F530V–00	38 – 9
	39 – 9
1XD–F530V–10	35 – 8
	36 – 8
1XD–F530X–00	38 – 10
	39 – 10
1XD–F530X–10	35 – 9
	36 – 9
1XD–F530Y–00	38 – 11
	39 – 11
1XD–F530Y–10	35 – 10

PART NO.	REF. NO.
1XD–F530Y–10	36 – 10
1XD–F531H–00	38 – 7
	39 – 7
1XD–F532F–00	39 – 22
2MB–F5345–00	27 – 36
2MB–F5351–00	27 – 40
2MB–F5355–00	27 – 39
1XD–F536E–00	38 – 18
	39 – 18
1XD–F5390–00	38 – 1
	39 – 1
1CT–F539F–00	27 – 42
2MB–F5689–00	27 – 37
1XD–F5690–00	41 – 14
2MB–F582T–00	37 – 1
	37 – 3
	40 – 1
	40 – 3
2MB–F5871–00	42 – 26
1XD–F5872–00	42 – 16
2MB–F5873–00	42 – 28
1XD–F5882–00	42 – 15
1XD–F5926–00	34 – 5
1XD–F6372–00	25 – 2
1XD–F7200–00	41 – 7
1XD–F7286–00	43 – 5
2MB–F7411–00	43 – 1
1HP–F7414–00	12 – 8
2MB–F7421–00	43 – 7
1XD–F7801–00	41 – 3
5B4–F8100–00	21 – 22
1XD–F811A–00	21 – 23
1P0–F8186–01	54 – 17
2MB–F8219–00	25 – 1
2MB–F8309–00	22 – 13
2MB–F831T–00	21 – 16
2MB–F8378–00	24 – 20
	24 – 33
2MB–F8385–00	45 – 7
2MB–F839U–00	10 – 33
2MB–F840K–00	45 – 9
2MB–F840M–00	45 – 11
1XD–F8446–00	54 – 11
2MB–F845J–00	25 – 22
2MB–F845N–00	45 – 4
2MB–F846J–00	25 – 23
2MB–F847J–00	25 – 24
2MB–F8483–00	25 – 18

PART NO.	REF. NO.
2MB–F8484–00	25 – 19
2MB–F8485–00	25 – 20
2MB–F8499–00	25 – 21
2MB–F84A3–00	25 – 8
2MB–F84A4–00	25 – 9
1CT–G1297–00	27 – 47
1CT–G1298–00	27 – 45
2MB–G2134–00	27 – 14
2MB–G2478–00	27 – 38
1CT–G5319–00	27 – 51
1XD–G5319–00	27 – 19
1XD–G5567–00	27 – 25
1XD–G5577–00	27 – 26
2MB–G6101–01	27 – 1
2MB–G6110–00	27 – 30
2MB–G6121–00	27 – 29
2MB–G6122–00	3 – 9
2MB–G6126–00	27 – 32
2MB–G6151–00	27 – 3
1XD–G6152–00	27 – 4
1CT–G6156–00	27 – 6
2MB–G6172–00	27 – 54
1CT–G6277–00	27 – 43
1XD–G631A–00	27 – 5
2MB–G631E–00	27 – 23
1CT–G6819–00	27 – 11
2MB–G7491–00	29 – 8
1XD–G7531–00	27 – 20
2MB–H1410–00	47 – 1
2MB–H1450–00	47 – 2
2MB–H1815–00	48 – 9
2MB–H1890–00	48 – 1
5UG–H2100–00	52 – 16
2MB–H2116–00	52 – 26
1XD–H212B–00	52 – 17
5UG–H2510–00	52 – 34
5UG–H251S–00	41 – 15
5UG–H2526–00	53 – 9
2MB–H2540–00	52 – 4
2MB–H2540–10	52 – 6
1HP–H254B–10	53 – 1
5UG–H2579–00	52 – 35
1XD–H3530–00	53 – 13
2MB–H3755–00	52 – 11
2MB–H431W–00	5 – 7
2MB–H5790–00	52 – 9
JW1–K6179–01	43 – 3
	43 – 9

PART NO.	REF. NO.
2MB–K7171–00	24 – 15
2MB–K7172–00	24 – 29
2MB–K7172–00	24 – 10
	24 – 24
1XD–K7526–00	46 – 6
	46 – 12
1XP–K7588–00	46 – 27
5UG–K7588–00	46 – 25
2MB–K7711–01	22 – 1
1XD–K7761–00	54 – 21
1XD–K7762–00	54 – 22
2MB–K8185–00	45 – 1
2MB–K8186–00	45 – 2
2MB–K830A–00	46 – 17
2MB–K830B–00	46 – 19
2MB–K8314–00	46 – 23
1XD–K831A–00	46 – 1
1XD–K831E–00	46 – 7
2MB–K8365–00	44 – 14
1XP–K8366–00	46 – 26
5UG–K8366–00	46 – 24
2MB–K8392–00	46 – 13
2MB–K8393–00	46 – 15
1XD–K8483–00	54 – 15
	54 – 16
1XD–K8557–10	24 – 7
	24 – 21
1UY–W0048–50	37 – 12
	37 – 25
	40 – 11
	40 – 25
90101–06824	34 – 2
90105–06176	20 – 18
90105–06639	21 – 9
90105–06831	7 – 14
	32 – 22
90105–06832	9 – 13
	32 – 28
90105–06833	10 – 27
	25 – 10
	42 – 29
	52 – 15
90105–08129	42 – 12
90105–08867	21 – 21
	32 – 25
90105–10255	28 – 39
90105–10265	37 – 5
	40 – 18

PART NO.	REF. NO.
90105–10265	40 – 32
90105–10267	26 – 9
	30 – 13
90105–10283	30 – 24
90105–10314	21 – 8
90105–12055	29 – 6
90105–12056	29 – 5
90105–12066	28 – 41
90105–12082	27 – 68
90105–12089	38 – 30
	39 – 30
90109–06172	20 – 34
90109–06202	22 – 17
	45 – 10
	45 – 12
90109–06262	10 – 29
90109–06897	24 – 13
	24 – 27
90109–068A5	25 – 25
	44 – 3
	45 – 8
90109–08082	37 – 2
	37 – 4
	40 – 2
	40 – 4
90111–06086	24 – 16
	24 – 30
90111–06106	44 – 9
	44 – 12
90111–06123	44 – 10
	44 – 17
90111–10802	46 – 14
	46 – 16
	46 – 18
90111–12002	34 – 11
90114–12002	35 – 26
	36 – 26
	38 – 5
	39 – 5
90119–06018	22 – 29
90119–06137	30 – 27
90119–06226	14 – 42
	22 – 11
	22 – 18
	22 – 22
	22 – 23
	22 – 24
	24 – 3

PART NO.	REF. NO.
90119–06226	24 – 6
	25 – 7
	43 – 11
	43 – 12
	45 – 3
90119–06868	7 – 21
	7 – 29
	9 – 2
	14 – 35
	14 – 45
	21 – 19
	52 – 24
90149–06302	23 – 3
	23 – 7
90154–05021	50 – 10
90159–05044	50 – 8
90164–04800	22 – 3
90167–06800	46 – 28
90170–08358	20 – 20
90170–36279	16 – 38
90171–12001	30 – 17
	31 – 26
90179–08015	52 – 28
90179–12262	35 – 4
	36 – 4
	38 – 6
	39 – 6
90179–16015	28 – 54
90179–24006	35 – 28
	36 – 28
	38 – 20
	39 – 20
90183–05008	50 – 9
	52 – 20
90183–06071	22 – 15
90183–060A6	14 – 44
	22 – 16
	22 – 25
	25 – 13
	25 – 16
	43 – 2
	43 – 8
	44 – 2
	52 – 19
	52 – 51
90183–06811	14 – 41
90185–10011	21 – 4
	21 – 6

PART NO.	REF. NO.
90185–10011	28 – 45
	29 – 16
	46 – 3
	46 – 5
	46 – 9
	46 – 11
	46 – 22
90185–10012	26 – 10
	29 – 12
	30 – 14
	30 – 23
90185–12002	27 – 65
	27 – 69
	28 – 42
90185–12008	31 – 29
90185–12009	29 – 7
90185–12010	38 – 31
	39 – 31
90201–05N15	49 – 3
90201–06036	20 – 17
	25 – 11
	30 – 28
90201–065G8	32 – 19
90201–083P5	31 – 19
90201–10035	28 – 40
	28 – 46
	29 – 11
	30 – 15
90201–10118	42 – 25
	42 – 34
90201–11801	34 – 13
90201–15018	41 – 4
	41 – 8
90201–16021	28 – 55
90201–25023	35 – 27
	36 – 27
	38 – 19
	39 – 19
90240–08005	42 – 13
90267–24143	22 – 6
90267–489U9	33 – 10
	33 – 22
90269–05055	20 – 32
90269–07803	14 – 43
	22 – 10
	22 – 12
	22 – 21
	22 – 27

PART NO.	REF. NO.
90269–07803	24 – 2
	24 – 5
	25 – 6
	25 – 14
	25 – 17
	43 – 4
	43 – 6
	43 – 10
90340–10001	28 – 18
90340–14029	28 – 32
90381–18003	38 – 27
	39 – 27
90387–06113	9 – 5
90387–061V1	32 – 18
90387–06304	24 – 18
	24 – 32
90387–06M89	44 – 15
90387–07021	32 – 16
90387–07037	10 – 28
90387–12N54	38 – 28
	39 – 28
90387–35007	35 – 22
	36 – 22
	38 – 25
	39 – 25
90401–10015	42 – 24
	42 – 33
90430–10003	28 – 20
90445–072J4	27 – 61
90445–07809	28 – 34
90445–08845	7 – 27
90445–08846	7 – 25
90445–09220	51 – 5
90445–09826	32 – 13
90445–09827	32 – 11
90450–59009	10 – 5
90450–72004	10 – 3
90450–94001	10 – 31
	14 – 47
90450–99004	10 – 7
90460–85135	14 – 36
90461–12800	7 – 13
90462–15800	9 – 12
90464–10833	27 – 63
90464–12830	41 – 18
	53 – 4
90464–14004	32 – 2
90464–15157	52 – 30

PART NO.	REF. NO.
90464–16012	42 – 23
	42 – 32
90464–18002	42 – 20
90464–20010	32 – 4
90464–25826	53 – 6
90464–29179	7 – 26
	7 – 28
	53 – 7
90464–40825	41 – 12
90464–48800	9 – 10
	53 – 2
90467–07029	27 – 62
	28 – 35
90467–08003	7 – 30
90467–09006	32 – 12
	32 – 14
90467–140A4	1 – 18
90467–150A0	9 – 9
	9 – 15
90467–16063	10 – 4
90467–17089	1 – 26
90467–220A1	10 – 26
	10 – 35
90467–26189	7 – 12
90480–01400	32 – 17
90480–01558	22 – 20
	52 – 18
90480–13029	44 – 5
90480–13567	10 – 36
90480–15235	7 – 19
	9 – 4
90480–18016	32 – 15
90480–20543	32 – 3
90501–05764	50 – 5
90501–20361	27 – 53
90501–650A0	16 – 35
90506–20192	41 – 6
	41 – 10
90506–26012	12 – 3
91312–08025	31 – 18
91402–20020	31 – 27
	42 – 14
91402–25020	30 – 18
92012–06012	35 – 30
	36 – 30
	38 – 33
	38 – 35
	39 – 33

PART NO.	REF. NO.
92012–06012	39 – 35
92012–10060	46 – 21
92012–10060	46 – 4
	46 – 10
92502–06012	11 – 4
92902–05600	52 – 48
	53 – 16
92902–08200	12 – 11
92902–12200	27 – 66
	27 – 70
	28 – 43
	31 – 30
93102–30010	28 – 50
93102–30170	28 – 51
93104–41119	16 – 32
93105–46001	28 – 13
93106–50002	35 – 21
	36 – 21
	38 – 24
	39 – 24
93210–16M69	28 – 37
93210–44545	16 – 33
93306–00613	28 – 8
93306–20725	35 – 20
	36 – 20
	38 – 23
	39 – 23
93306–30574	27 – 22
93399–99948	28 – 27
	28 – 30
	28 – 57
	28 – 59
93410–22039	27 – 57
93430–12008	41 – 5
	41 – 9
93440–20088	28 – 28
	28 – 31
	28 – 58
	28 – 60
93450–22119	35 – 18
	36 – 18
93700–06004	38 – 26
	39 – 26
93900–00813	35 – 3
	36 – 3
	38 – 3
	39 – 3
94108–12821	35 – 2

PART NO.	REF. NO.
94108–12821	36 – 2
94110–12818	38 – 2
	39 – 2
95022–06008	52 – 33
95022–06012	12 – 7
95022–10030	31 – 14
95302–06800	32 – 9
95302–08700	20 – 21
95602–05100	49 – 2
95602–06200	23 – 4
	23 – 8
	24 – 14
	24 – 17
	24 – 28
	24 – 31
95612–06100	34 – 3
95702–06300	51 – 4
95702–06500	52 – 23
95702–08500	12 – 15
95802–06030	32 – 20
95812–06010	21 – 15
	42 – 19
	42 – 22
	42 – 31
95812–06012	41 – 16
95812–06014	28 – 21
	52 – 29
95812–06016	52 – 50
95812–06020	52 – 22
95812–06025	9 – 6
	42 – 17
95812–08012	33 – 11
	33 – 20
95812–08016	21 – 13
	21 – 17
	21 – 25
	27 – 71
	41 – 2
95812–08020	28 – 62
	31 – 23
	31 – 25
95812–08040	12 – 13
	28 – 22
95812–08050	28 – 25
95812–10016	45 – 5
	46 – 20
95812–10020	21 – 11
	29 – 15

PART NO.	REF. NO.
95812–10025	28 – 44
95812–10045	46 – 2
	46 – 8
95812–12020	34 – 10
95812–12130	27 – 64
95822–10040	7 – 32
97002–05016	52 – 47
97002–05020	53 – 15
97002–06016	52 – 3
97080–08020	52 – 27
97702–50520	10 – 24
98502–03530	50 – 4
98502–04006	11 – 11
99001–08600	20 – 30
99002–06600	20 – 24
99009–19400	27 – 55
99009–32400	30 – 4
	30 – 8
	35 – 24
	36 – 24

PART NO.	REF. NO.